COMMSCOPE®

Installation Instructions

F265
Rev C, March 2024
www.commscope.com

FOSC 400 C5 & D5 FIBER OPTIC SPLICE CLOSURE

Contents

1 General product information

The FOSC 400 C5 and D5 closures are combination cable closures and splice organizers, providing mechanical seals and heat-shrinkable sleeves with hot-melt adhesives to environmentally seal fiber cable splice points.
FOSC 400 C5 and D5 closure kits are available in several configurations, as described by the kit naming convention described below.

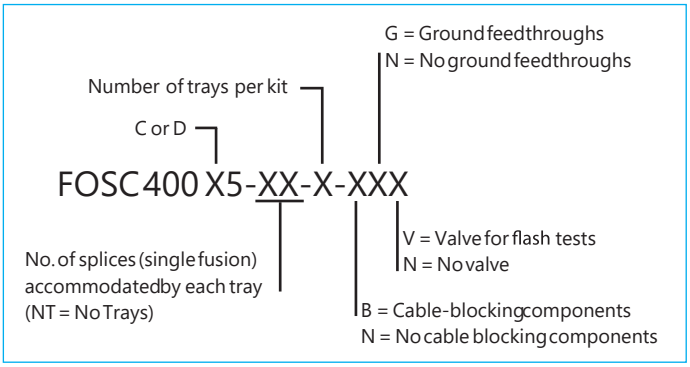

1.1 Cables

The closures support a butt splice configuration with one oval cable entry port and five large round cable entry ports. Chart 1 indicates each port's capacity.

Port	Capacity	Cable diameter range (inches)
Oval	2 cables	0.4 - 1.0
Round (5)	1 or 2 cables each	0.2 - 1.25

The closures accommodate cable with any combination of the following characteristics:

1.1.1 Cable types

- Loose buffer tube (stranded-fiber and ribbon)
- Central core tube (stranded-fiber and ribbon)
- Slotted Core

1.1.2 Strength member/ shield types

- Dual strength member
- Central member
- Multiple strength member
- Unshielded
- Shielded
- Double-shielded

1.1.3 Fiber types

- Single-fiber (250 micron [tight-jacketed])
- Ribbon

1.1.4 Locations

The closures accommodate unpressurized fiber cable in these locations:

- Direct buried
- Below grade
- Above grade
- Pole mount
- Aerial

2 Warnings

As with any electrical equipment, various safety precautions should be noted when operating a hot-air gun. Please take note of these warnings:

2.1 Keep the area clear of all combustible materials and gases, such as gasoline, solvents, and dirty rags. Consult your compa-ny- approved practice for procedures to clear and ventilate the work area to avoid the potential for fire and/or explosion.

2.2 Do not immerse the hot-air gun in water, as electrical shock could occur.

2.3 Flash test the closure to no more than 5 psi.

3 Required tools and materials

You will need these tools and materials to install the closures:

- 1750 watt AC power source
- FOSC closure work stand (FOSC-ACC-Work Stand -optional)
- Snips and sheath knife
- Buffer tube cutter
- Hot-air gun with tip (FOSC ACC CV 1981)
- Assorted hand tools, such as a hacksaw, screwdrivers, pliers, crescent wrenches, can wrench
- White marking pencil
- Locally approved cleaning solution
- Tape measure
- Clean, dry cloths

4 Standard components

The following items are included in the fiber optic splice closure kits:

4.1 Basic components

- Base
- Splice organizer tray(s) with dust cover
- Velcro strap
- Dome
- Mechanical dome-to-base seal and O-ring

4.2 Cable termination components

- 1 heat-shrinkable cable seal for the oval port
- Aluminum tape
- Branch-off clip
- Abrasive strip
- Bond wires and clamps
- Transportation tubes
- Tie wraps
- Installation instructions

5 General installation notes

To ensure the proper performance of the heat-shrinkable sleeve, take note of these precautions:

5.1 Do not install the heat-shrinkable sleeve at temperatures below -1°C (30°F).

5.2 If the cable is wet, dry the cable before installing the heat-shrinkable sleeve. Steam generated during heating will cause gaps in the adhesive, resulting in a faulty seal.

6 Supplementary kits

The following chart identifies supplementary kits available for use with the FOSC 400 C5 and D5 closures, and briefly describes their uses.

6.1 FOSC 400 C5 and D5 Closure Accessory Kits (can be used with either closure)

FOSC ACC Cable Seal -1 NT	Cable sealing kit (T=tubular seal) for installing one cable in any round port
FOSC ACC Cable Seal-1 NW	Wraparound cable seal (sleeve only) for use on any round port
FOSC ACC Cable Seal 2 NW	Wraparound cable seal (sleeve only) for use on any oval port
FOSC ACC Branch Off Clip	25 branch-off clips plus aluminum tape for installing two cables in one port (Use with FOSC ACC Cable Seal 1-XX Kits)
FOSC ACC D O-Ring Seal	Optional re-entry/repair kit with desiccant, o-ring, and cleaning tissues
FOSC ACC D Vault Bag	Contains a flame-retardant bag to be installed over the FOSC 400 D closure
FOSC ACC CB Sleeve W	Wraparound sleeve for cable blocking looped cable in any oval port
FOSC ACC TTube Ribn-16"	Ribbon (7/32") Transportation tubes, 16" (six 12-fiber ribbons per tube)
FOSC ACC Fiber Ext Grnd	External ground or "FEG" kit to isolate one cable ground through port
FOSC ACC Aerial Clamps	Clamps for mounting A, B, or D closures to an aerial strand
FOSC ACC Desiccant	Bags of desiccant (75g) Use one bag in A and B closures, two bags in D closures (optional)
FOSC ACC Port Rods - 0.5	Provides a .5" plug to be used with cable seals in closing open ports
FOSC ACC Funnel	Funnel for routing stranded fibers from central core tube cable to splice trays

6.2 FOSC 400 C5 Closure Accessory Kits

FOSC ACC C Tray-12	C splice tray with two SM6 splice modules
FOSC ACC C Tray-24	C splice tray with two SM12 splice modules
FOSC ACC C Basket	Basket for storing slack or express (uncut) loose buffer tubes or ribbons
FOSC ACC C Tall Basket	Taller version of above basket with more storage space

6.4 FOSC 400 D5 Closure Accessory Kits:

FOSC ACC D Tray-36	D splice tray with six SM6 splice modules (36 splices/tray)
FOSC ACC D Tray-48	D splice tray with six SM8 splice modules (48 splices/tray)
FOSC ACC D Trays 72	D splice tray with six SM12 splice modules (72 splices/tray)
FOSC ACC D Tray Ribn-24	D ribbon splice tray with four SM6 splice modules (Ribbon tray is double thickness of normal tray)
FOSC-ACC D Basket	Basket for storing slack or express (uncut) loose buffer tubes or ribbons
FOSC ACC D Basket-Tall	Taller version of above basket with more storage space
FOSC ACC D Ribbon Router	Snaps into baskets; helps route ribbons and transportation tubes onto trays
FOSC ACC D Pole Mount	For mounting closure to pole or wall
FOSC ACC Funnel-Ribbon	Funnel and ribbon transportation tubing for routing ribbons from cable to trays

7 Cable preparation

Cable core blocking is not included with the closure kit.
If cables are to be blocked prior to installation in a splice closure, ignore the instructions in this section and refer to the instructions on cable preparation included with the Cable Blocking Components.

The instructions that follow address the preparation of loose buffer tube and central core tube (stranded fiber and ribbon) cable. Preparation of cable ends and mid-span cables is explained. Refer to the appropriate section:

Fiber type	Cable type	Cable ends (see section #)	Midspan opening (see section #)
Stranded (Loose) fiber	Loose buffer tube	7.1	7.2
	Central core tube	7.3	7.5
Ribbon fiber	Loose buffer tube	7.6	7.7
	Central core tube	7.4	7.5

Cable type	Opening location	FOSC 400 C5 Closures Min. and max. suggested storage length***	FOSC 400 D5 Closures Min. and max. suggested storage length***
Loose Buffer Tube*	Midspan	52″ - 112″ in Tall basket 52″ - 90″ in Standard basket	102″ - 140″ in Tall basket 102″ - 120″ in Standard basket
	End	43″ - 72″	55″ - 75″
Loose Buffer Tube Ribbon	Midspan	60″ - 86″	70″ - 140″
	End	30″ - 45″	70″ - 90″
Central Core Tube Ribbon**	Midspan	60″ - 86″	70″ - 140″
	End	30″ - 45″	70″ - 90″

* LBT: 52″ goes directly to tray. 90″ cut in center makes one small loop in basket and approx. 22″ on tray.
** Ribbon: 60″ small loop in basket in front of tower and onto the tray. 86″ loop to the end of the basket and onto the tray.
*** The Minimum cut length is based on cutting dead-to-the-field side going directly to the tray. The Maximum cut length is based on entry into the basket to tray.

7.1 Loose buffer tube cable end preparation

To prepare the ends of loose buffer tube cable, follow these steps:

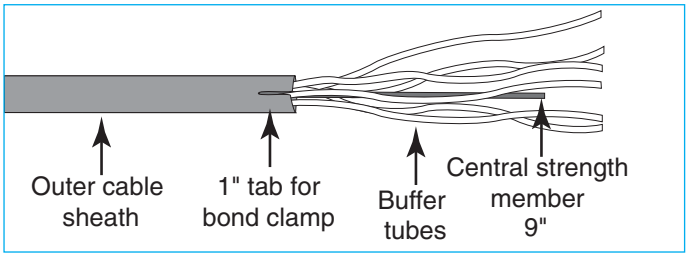

Figure 1.

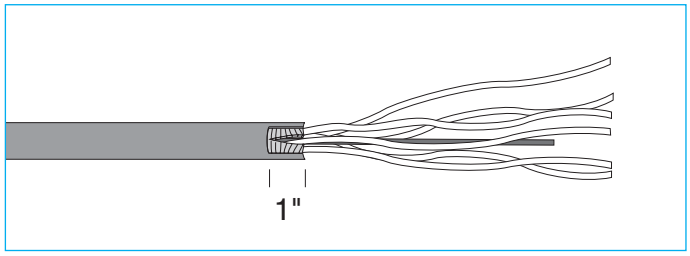

Figure 2.

7.1.1 Clean the cable and remove the outer cable sheath and shield if present (see chart above for lengths). Remove the aramid and fiber yarns to the ring cut.

7.1.2 Cut central member 9" from the ring cut. (Figure 1)

7.1.3 Strip away any insulation present on the central member all the way back to the ring cut.

7.1.4 If a shield is present in the cable, tab the cable 1" from the ring cut. Crimp the alligator bond clamp to the tab in the sheath.

7.1.5 If you are using a B-Bond clamp on double-armored cable, remove a 1" square section of the outer cable sheath around the tab. (Figure 2) Slide the lower plate of the bond clamp under the inner shield so that the stud bolt sticks up through the tab. Place the upper plate of the B-Bond clamp over the bolt.
Place a double-eyelet bond wire (available in the FOSC ACC closure bond wire kit) over the bolt. Install the nut on the bolt and tighten it. Optionally, you can cut off the excess stud bolt and file it flush with the nut. (Figure 3)

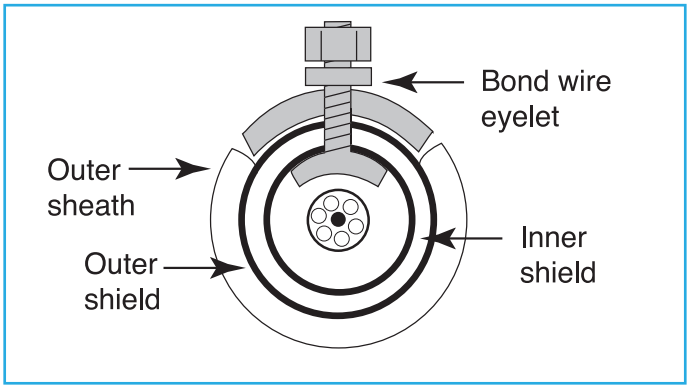

Figure 3.

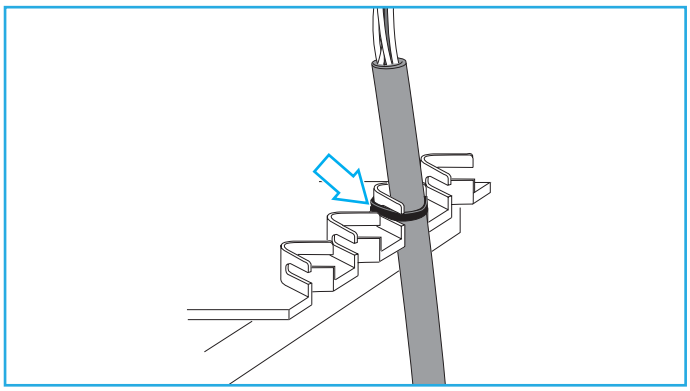

Figure 4.

<u>Important</u>: Do not use braided or stranded ground wire when installing a ground through a port on the FOSC 400 Closures. A solid ground wire is required to prevent a leak path and make a proper seal.
<u>Note</u>: For flexible buffer tube cable, skip steps 6 - 10.

7.1.6 Attach cable end to the FOSC closure work stand using a tie wrap as shown. (Figure 4)

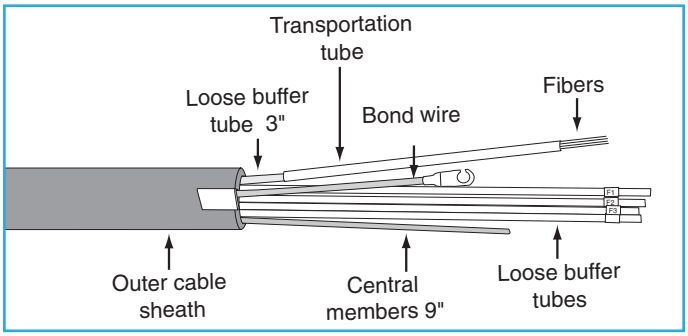

Figure 5.

7.1.7 Carefully ring cut and remove all but three inches of each buffer tube. Clean the remaining buffer tubes, exposed fibers, strength member, and 6" of the cable sheath with a cloth and company-approved cleaning solution. (Figure 5)

7.1.8 Install one transportation tube on each buffer tube and slide it down to the sheath ring cut.
<u>Note</u>: Two sizes of transportation tubes are provided for six-fiber and twelve-fiber buffer tubes.

7.1.9 Wrap cable with vinyl tape from 1" below the bond clamp to 2" above the ring cut to hold transportation tubes in place.

7.1.10 Place an identification marker on each transportation tube. On feeder tubes (in cable), place the markers 6" above the ring cut. On distribution tubes (out cable), place the markers 9" above the ring cut.

7.2 Loose buffer tube cable - midspan opening preparation

7.2.1 Clean the cable and remove cable sheath (and shield, if present). For lengths, refer to chart on page 3.

7.2.2 Prepare both sides of the midspan opening as described in Section 7.1, but do not remove buffer tubes from fibers that will be looped, uncut, through the closure. Refer to the instructions included with the required basket kit for buffer tube storage procedures.

7.3 Central core tube stranded fiber cable end preparation

The following procedure describes the use of funnels to distribute fibers to the organizer trays. An alternative procedure is to route the entire central core tube to the bottom tray.

7.3.1 Clean the cable and remove outer cable sheath. For lengths, refer to chart on page 3.

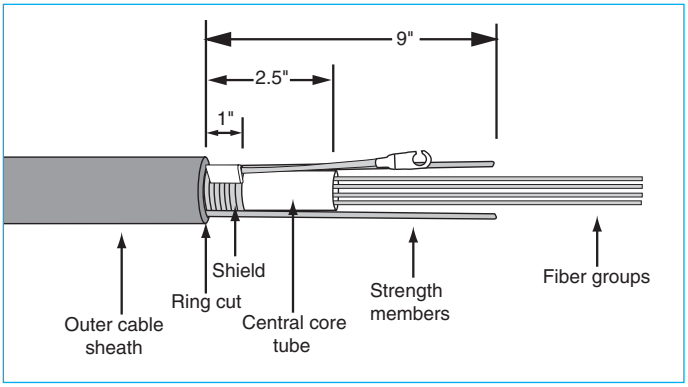

Figure 6.

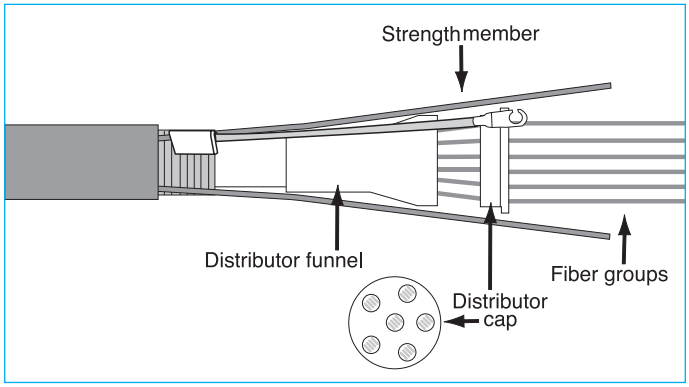

Figure 7.

7.3.2 If dual strength members (e.g., LXE) or multiple metallic strength members (eg., crossply) are present: expose each strength member and cut it off 9" from the ring cut. (Figure 6)

7.3.3 If multiple non-metallic strength members (eg., EST) are present: cut them off at the ring cut.

7.3.4 If metal shield is present: Remove all but 1" of the metal shield. (Figure 6) Pry open a 1" tab in the exposed metal shield where the shield overlaps. Crimp the bond clamp onto the edge of the shield.
<u>Important</u>: Do not use braided or stranded ground wire when installing a ground through a port on the FOSC 400 closures. A solid ground wire is required to prevent a leak path and make a proper seal.

7.3.5 Attach the cable to the FOSC closure work stand with a tie wrap. (See Figure 4)

7.3.6 Cut the central core tube 9" from the ring cut and remove the excess tube. (Figure 6)

7.3.7 Separate the fiber groups and clean the exposed components with a clean cloth and company-approved cleaning solution.

7.3.8 Slide the small end of the distributor funnel over the fiber groups, and slide it down over the central core tube.

7.3.9 Place one fiber group in each hole of the distributor cap. (Figure 7)

7.3.10 Carefully slide the distributor cap down until it seats in the funnel.

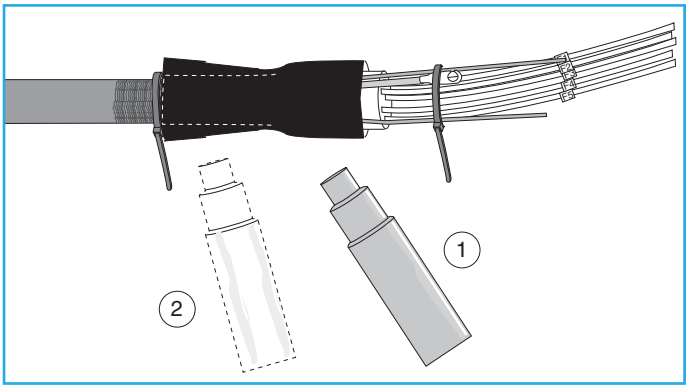

Figure 8.

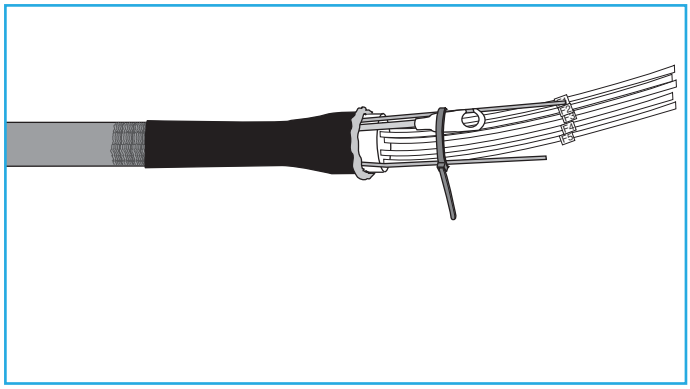

Figure 9.

7.3.11 Place the fibers from each distributor cap hole into a transportation tube, and slide the tube down into the hole. (Fig. 8)

7.3.12 Place an identification marker on each transportation tube. On feeder tubes (in cable), place the markers 6" above the ring cut. On distribution tubes (out cable), place the markers 9" above the ring cut.

7.3.13 Place a tie-wrap 1" below the ring cut. Slide the 4"-long black heat-shrinkable tube over the cable components and allow it to rest on the tie wrap. The top of the tube should be roughly 1/2" below the top of the funnel. (Figure 8)

7.3.14 Place a tie wrap around the transportation tubes to hold them in place.

7.3.15 With the CV1981 on setting 6, begin shrinking the tube around the top of the funnel. After recovering 1" of tube on funnel, pause for 15 seconds to allow the adhesive to set on the funnel. Complete shrinking the tube. (Fig. 9)

7.3.16 After the tube has cooled, remove the tie wraps.

7.4 Central core tube ribbon fiber cable end preparation (for installation in the oval port)

Important: A metal slack basket (FOSC ACC C or D Basket) and ribbon sized transportation tubing (FOSC ACC TTube Ribn) are required. The FOSC ACC D closure ribbon router tray can be used to help route ribbons and transportation tubes from the slack basket up onto splice organizer trays (used in the D-size basket only).

To prepare the ends of central core tube ribbon cable for installation in the oval port, follow these steps:

7.4.1 Perform Steps 1-5 in Section 7.3.

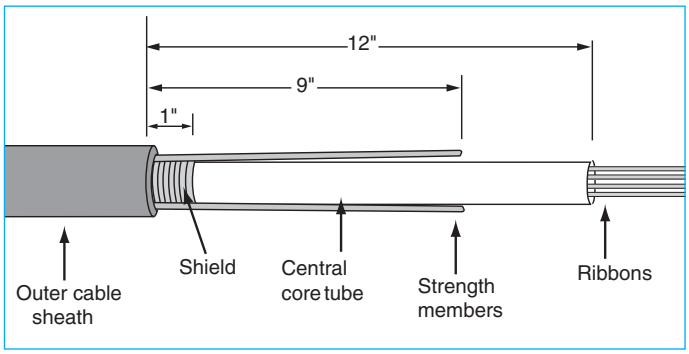

Figure 10.

7.4.2 Carefully cut the central core tube 9" from the sheath ring cut (Figure 10).

7.4.3 Separate the ribbons and clean the exposed components with a clean cloth and company-approved cleaning solution. Stack the ribbons in the order in which they appear in the central core tube. Temporarily wrap a piece of vinyl tape around the ribbons about 1" from the tube to help keep the ribbons stacked.

Note: If the ribbons are not stacked properly, or if they are twisted, light signals may be attenuated.

7.5 Central core tube cable stranded fiber and ribbon- midspan opening (for installation in the Oval Port)

7.5.1 Clean the cable and make two ring cuts, centering the point at which the cable will be spliced. Remove the outer cable sheath between the ring cuts, with the length of cable sheath to be removed specified in the chart on page 3.

7.5.2 Prepare both sides of the midspan opening as described in Section 7.4

7.6 Loose buffer tube ribbon cable ends

Important: A slack basket (FOSC ACC C or D Basket) and ribbon sized transportation tubing (FOSC ACC TTube Ribn) are required.

This section pertains to loose buffer tube cable that contains ribbons inside the individual loose buffer tubes. To prepare the cable, follow the instructions in Section 7.1 of this practice, but leave 9" of each loose buffer tube intact beyond the sheath ring cut. Do not install transportation tubes on the loose buffer tube ends.

7.7 Loose buffer tube ribbon cable mid-span openings

Important: A slack basket (FOSC ACC C or D Basket) and ribbon sized transportation tubing (FOSC ACC TTube Ribn) are required.

This section pertains to loose buffer tube cable that contains ribbons inside the individual loose buffer tubes. A mid-span opening of loose buffer tube ribbon cable can only be installed in the oval port. To prepare the cable, open the cable, exposing the loose buffer tubes. (Length of cable to be opened is specified in the chart on page 3.) Prepare as in Section 7.1, removing all but 9" of each buffer tube. Do not cut ribbons or install transportation tubes.

7.8 Splice Closure Installation Instructions

Figure 11 (next page) indicates that the oval port side of the base is the feeder (or in cable) side of the closure, and the opposite side is the distribution (or out cable) side.

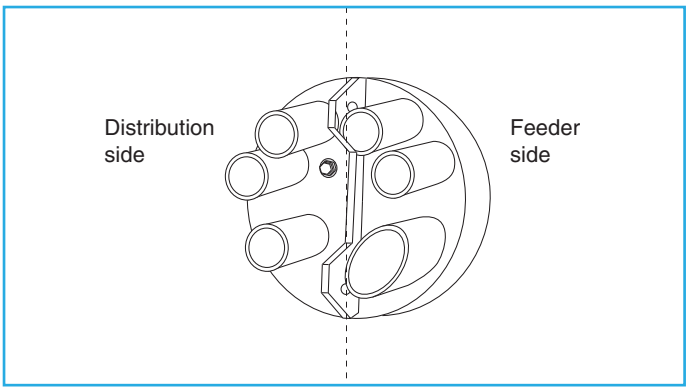

Figure 11.

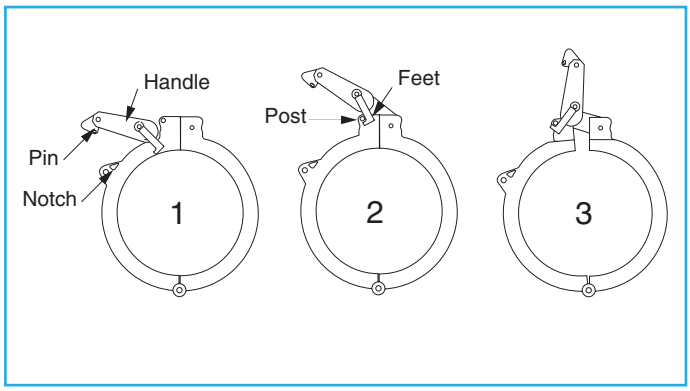

Figure 12.

8 Remove Dome/Base Seal

8.1 Push the handle to the side to release the pin from the notch, then lift the handle. See Figure 12, Step 1.

8.2 Hook the "feet" of the handle behind the two posts and pry open one half of the clamp. See Figure 12, Steps 2 and 3.

8.3 Move the handle out of the way and gently tap the other half of the clamp to release it from the dome.

8.4 Support the dome before removing the clamp. Remove dome and O-ring. Hang O-ring on top of dome.

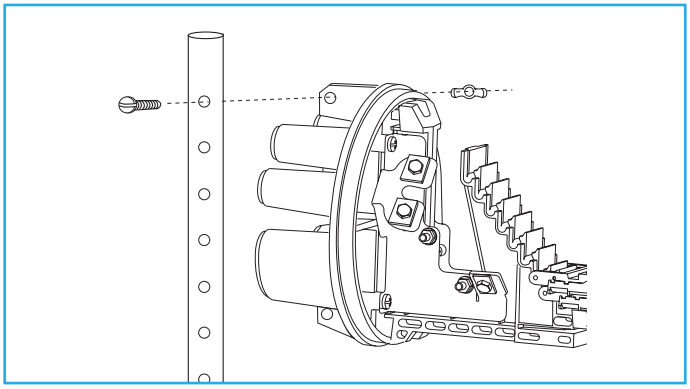

Figure 13.

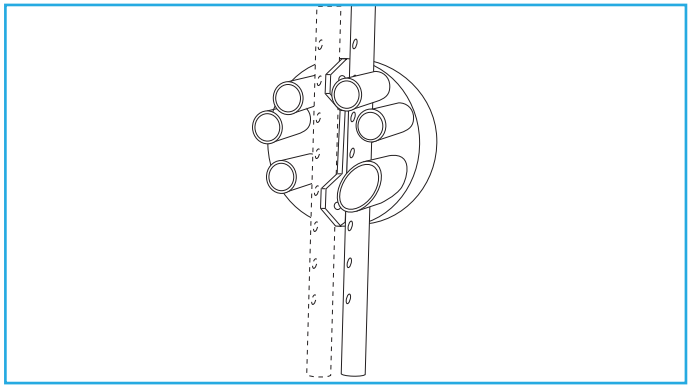

Figure 14.

8.5 Protect dome from dirt during installation. DO NOT SIT ON DOME! Attach the closure base to the FOSC closure work stand using a nut and bolt. (Figure 13)

<u>Note</u>: Position the work stand post on either side of the closure flanges to avoid blocking the port you are working on. (Fig. 14)

9 Install cables

9.1 Open the ports

9.1.1 Select the appropriate port to open on the base. These instructions assume that the oval port is selected.

<u>Note</u>: An oval port seal is included with most C5 and D5 Kits. If you intend to open a round port, you will need one FOSC ACC closure cable seal 1XX kit to seal each opened round port. (See Section 12)

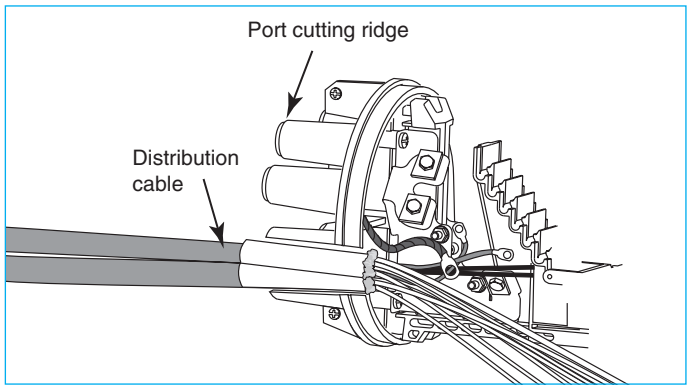

Figure 15.

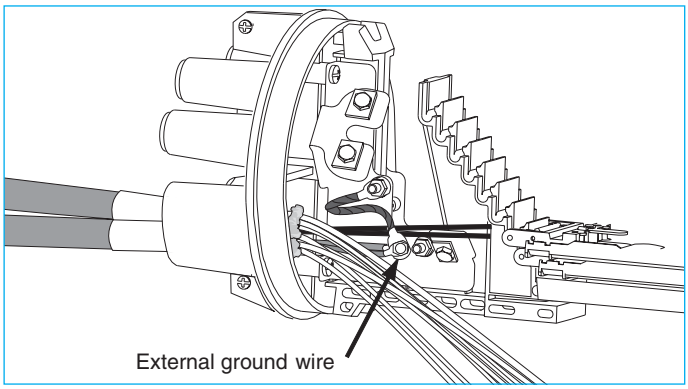

Figure 16.

9.1.2 Cut the end off the selected port at the ridge with a hacksaw. (Figure. 15)

<u>Important</u>: Slide tubular cable port seal over cable(s) before installing cable(s) in the port! The arrow on the seal should point at the base. (If you forget this step, you may need to order a wraparound oval port sleeve.)

9.2 Bond and ground metal components

9.2.1 Base with 7 lugs

If ordered configurations comes with a 7-lug base grounding (Figure 18) amored cables can be common or isolated as following:

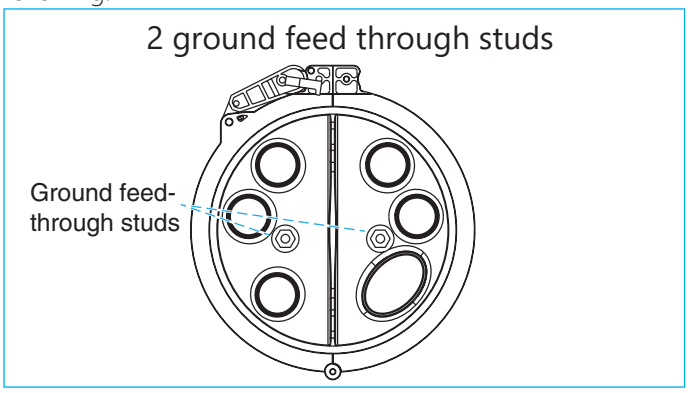

Figure 17.

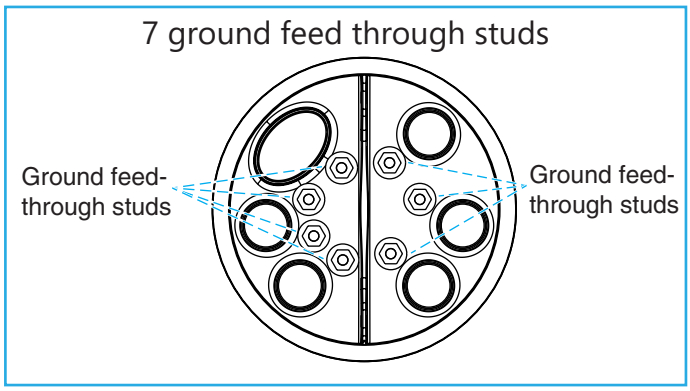

Figure 18.

- For isolated grounding, cable shield is bonded to feed through lugs using one of the lug wires for each cable. In case of cables with metal strength members, strength members are cut to cable ring cut and spacers are used to limit movement of cable. Refer to section 9.2.5 for spacers installation.

- For common grounding, one feed through lugs is used and bonded to the metal tray bracket. Then cable shield is bonded to the metal tray bracket. See Figure 16. Remove one of the wires from unused grounding stud. Secure the wire to the metal tray bracket. Bond oval port cables to the wire. Bond round port cable using square washer.

9.2.2 Base with 2 lugs

The closure supports two methods of external grounding:

• Grounding using the FOSC-ACC-Fiber Ext Grnd Kit (common or isolated grounding) (Figure 16)
• Grounding using two ground feedthrough studs. (Figure 17)

<u>Important</u>: Do not use braided or stranded ground wire when installing a ground through a port on the FOSC 400 closures. A solid ground wire is required to prevent a leak path and make a proper seal.

Various combinations of the procedures described in this section can be used to bond and ground cables and closure components in compliance with company-approved grounding standards.

<u>Note</u>: All steel strength members are bonded in common when captured under the square washer.

9.2.3 Bonding cables installed in the oval Port or bottom round port

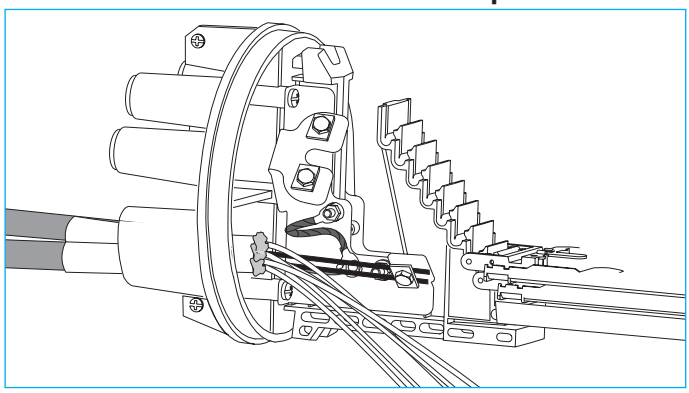

Figure 19.

Locate the two preinstalled twisted copper bonding cables attached to the tray bracket. One end of each twisted copper bonding cable is attached to the metal tray bracket; the other end is an eyelet to which bond wires from cables will be attached with the supplied nut and bolt assembly. (Figure 19) Each twisted copper bonding cable can accommodate two bond wires from fiber optic cables. Cables are now bonded with the base, which can be externally grounded using feedthrough studs or through external ground wires.

9.2.4 Bonding Cables Installed in the Four Top Round Ports

Insert the “hooked” bond wire eyelet between the bolt head and square washer opposite the port being used. Do not tighten the bolt until strength members are placed under the washer.

9.2.5 Spacers

Cable attachment spacers allow the installation of the cable without securing the strength member to the metal bracket inside the closure. Using the spacers will allow bonding and grounding of each cable separately.

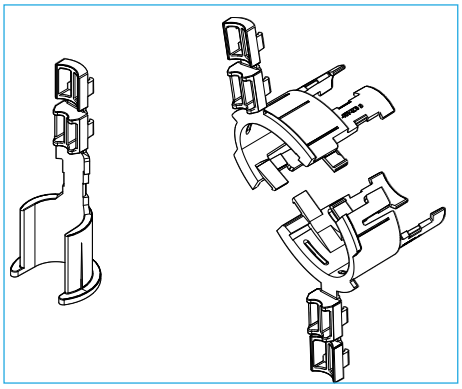

Figure 20.

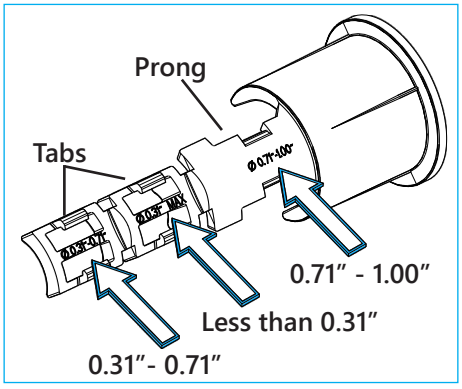

Figure 21.

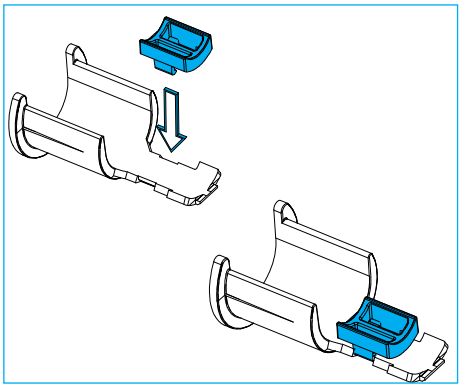

Figure 22.

9.2.5.1 Spacers are used to limit cable flexure inside the closure. Each spacer comes with tabs to accommodate a range of cable sizes up to 1.0" in diameter. (Figure 20)

9.2.5.2 Each tab and the prong on the spacer itself is marked to indicate a specific cable size. (Figure 21)

9.2.5.3 For cable sizes less than 0.71", break off the tab corresponding to the cable size and snap into spacer as shown above. For cables larger than 0.71" the tabs are not used. (Figure 22)

- **Install round spacer**

<u>Important</u>: Place seal kit onto the cable and bring the cable through the base (not shown) before assembling spacer.

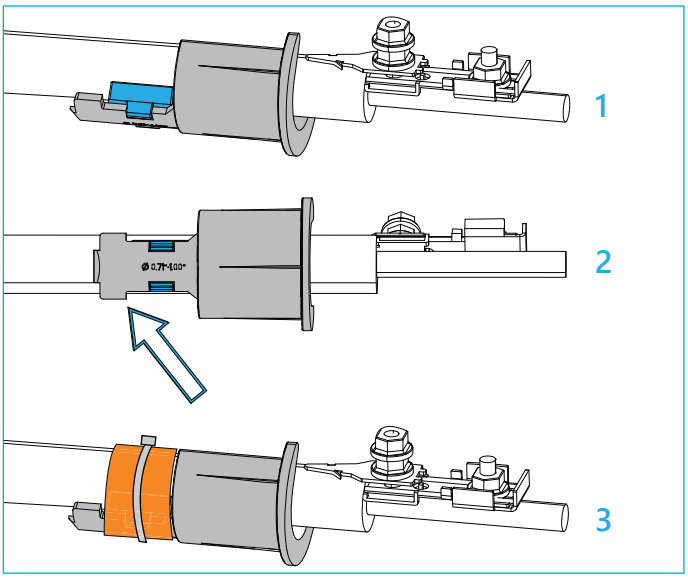

Figure 23.

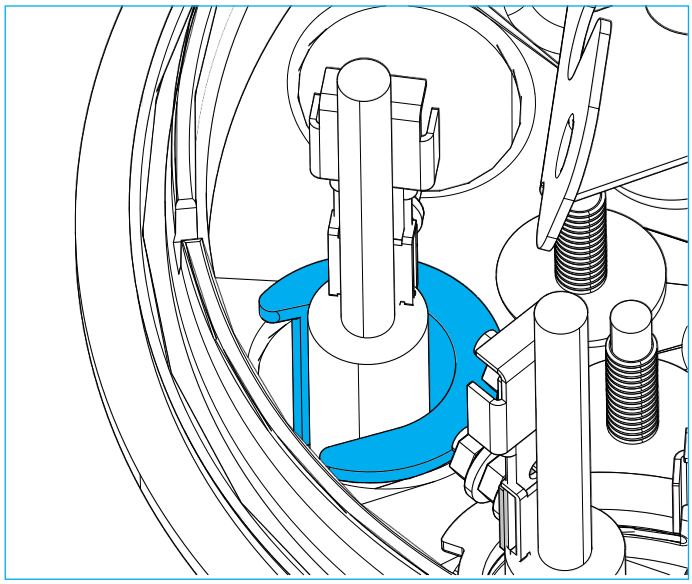

Figure 24.

9.2.5.4 Install the spacer to the cable. The spacer needs to be located at the end point of the bonding hardware at approximately 1 inch from the end of the jacket. (Figure 23 -1)

<u>Note</u>: Wrap tape above the tab on the prong to prevent the tape from sliding down.

9.2.5.5 Secure the spacer to the cable with vinyl tape and a cable tie. (Figure 23 - 2,3)

9.2.5.6 Pull the cable down until the spacer is completely bottomed out in the Base. (Figure 24)

- **Install oval spacer**

<u>Important</u>: Place seal kit onto the cable and bring the cable through the base (not shown) before assembling spacer.

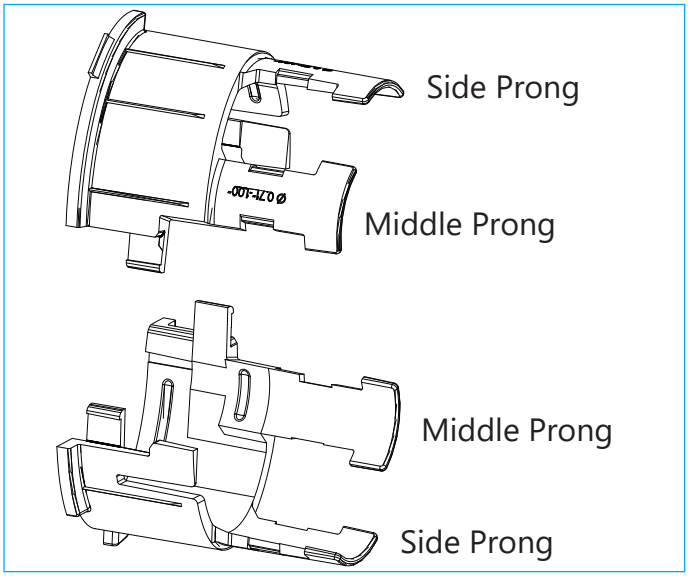

Figure 25.

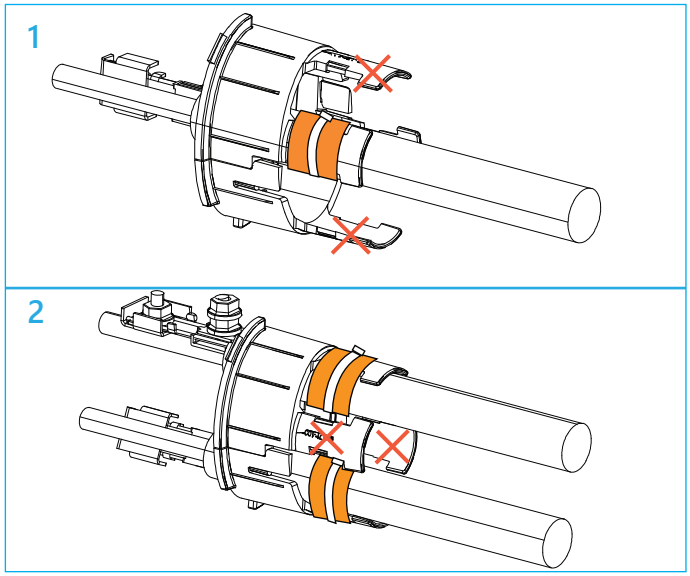

Figure 26.

9.2.5.7 If installing one cable, cut the side prongs and add a tab (if needed) to one of the middle prongs. Snap the two spacer pieces together and then wrap tape and a cable tie around the cable and prong. (Figure 26 -1)

9.2.5.8 If installing two cables in oval port cut the middle prongs, add tabs (if needed), and wrap each cable with tape and a cable tie. Snap the two pieces of the spacer together. (Figure 26 -2)

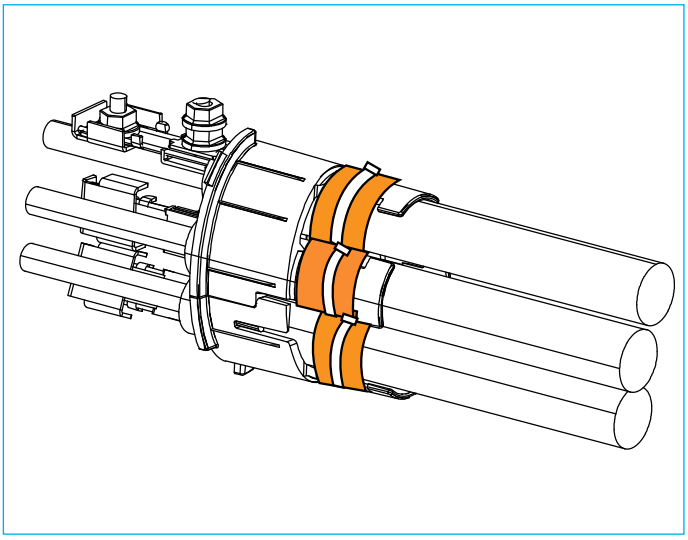

Figure 27.

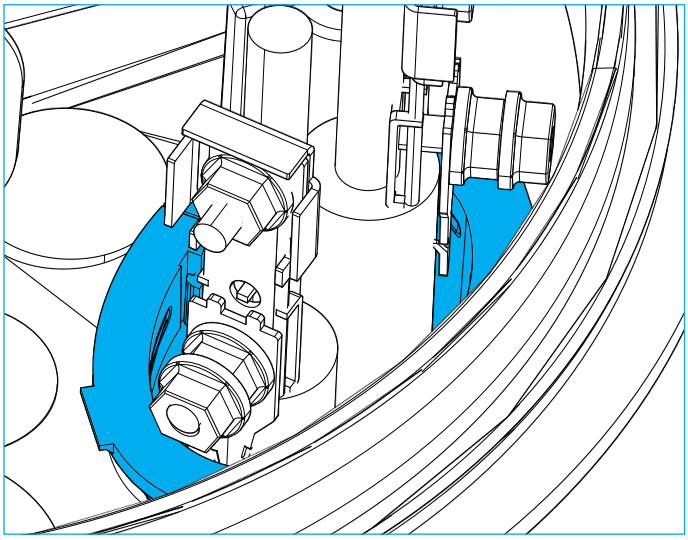

Figure 28.

9.2.5.9 If installing three cables, add tabs (if needed) and wrap with tape and cable ties the two side cables to the side prongs. Snap the two pieces of the spacer together. Place a tab on one of the middle prongs (if needed) and wrap the third cable to the prong with tape and a cable tie.(Figure 27)

9.2.5.10 Pull the cable down until the spacer is completely bottomed out in the Base. (Figure 28)

9.3 Attach strength members

To attach strength members from the cables to the metal tray bracket, follow these steps:

9.3.1 Align the strength member with the square washer with which it will be attached to the base. Trim the strength member 1/4" beyond the edge of the square washer.

9.3.2 Loosen the square washer and place the strength member(s) underneath it. Tighten the square washer to secure the strength members against the base. (Figure 19 page 8)

9.3.3 in case of common grounding and using the top four round ports, one bolt captures both the bond wire eyelet and the washer. It may be necessary with large central members to place a piece of the central member under each side of the washer to keep the washer level.

9.4 Seal cables in oval port

To seal cables in the oval port, follow these steps:

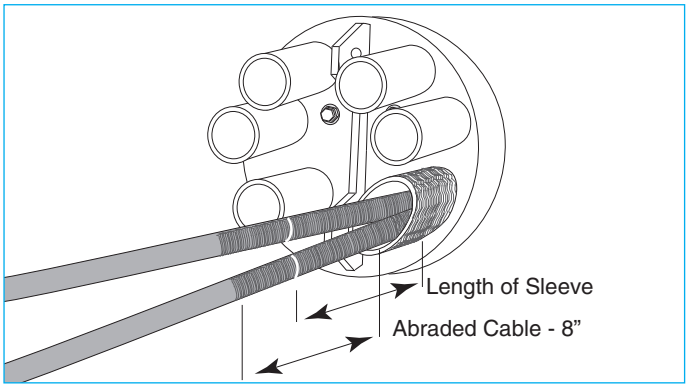

Figure 29.

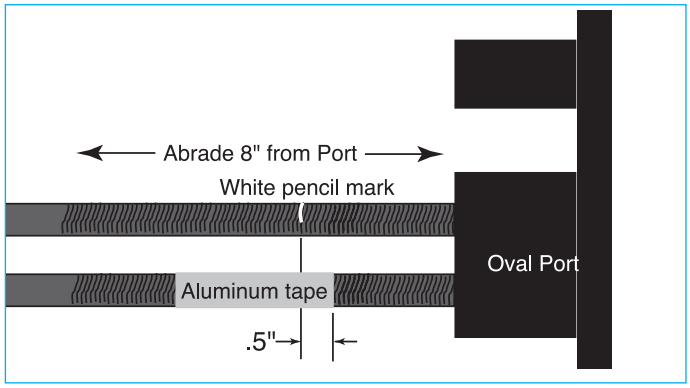

Figure 30.

9.4.1 Clean the port and 8" of cable sheath beyond the port edge with cleaning tissue. (Figure 29)

9.4.2 Abrade the port and 8" of cable with the supplied abrasive strip, and remove any abraded material from the port and sheath with a clean, dry cloth.

9.4.3 Slide the tubular cable port seal up around the port and cable. Be sure that the inside edge of the tube butts against the closure base. Squeeze the tube down onto the cable and place a white pencil mark on the cable just beyond the end of the tube.

9.4.4 Slide the tube back off the port.

9.4.5 Wrap one lap of aluminum tape around each cable. The edge of the tape closest to the closure should be 1/2" inside the white mark on the cable as shown in Figure 30.

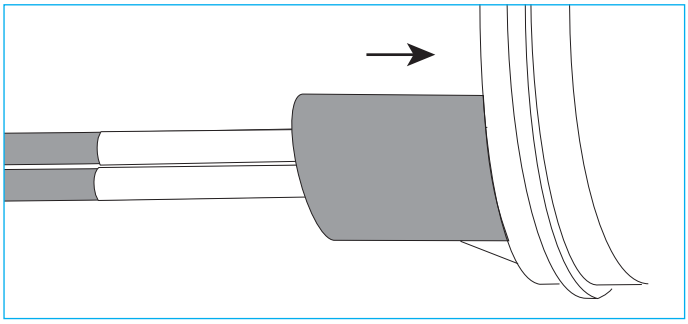

Figure 31.

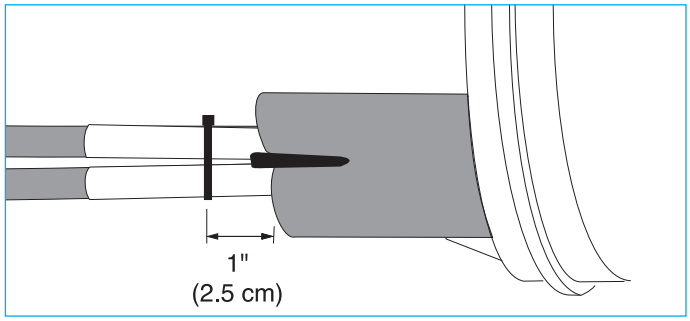

Figure 32.

9.4.6 Slide the tube back onto the port, being sure that the edge of the tube butts against the closure base. (Figure 31)

9.4.7 Install the branch-off clip as shown. The clip's base must touch the tube. (Figure 32)

9.4.8 Tie the cables together with a tie wrap 1" beyond the end of the tube.

9.4.9 Using the CV1981 hot-air gun on setting 10, begin shrinking the tube at the end closest to the base of the closure. Direct the air around the tube until the green paint turns black.

9.4.10 Continue heating the remainder of the tube as evenly as possible until it has completely conformed to the cable(s).

9.4.11 The seal is completely installed when melted adhesive appears at the cable end of the tube around the branch-off clip, and all green thermochromic paint on the tube has turned black.

<u>Note</u>: Do not overheat the tube or apply excessive heat to plastic parts of closure base.

10 Fiber organizing and splicing

10.1 Loose buffer tube cable - stranded fiber and central core tube cable - stranded fiber with funnels

Note: For mid-span openings, expressed fibers and/or buffer tubes are stored in a OSC ACC C or D Basket.

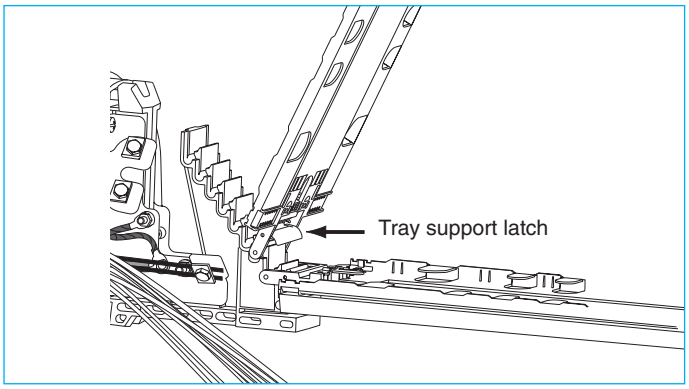

Figure 33.

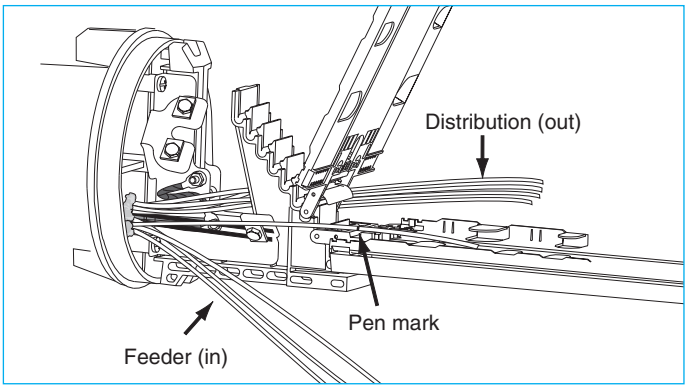

Figure 34.

10.1.1 If multiple trays are present, fill the bottom tray first. Use the tray support attached to the bottom of the second tray to hold it out of the way. (Figure 33)

10.1.2 Remove the tray cover and route the "feeder" (in) and "distribution" (out) tubes to the appropriate side of the tray. (Figure 34)

10.1.3 Place a pen mark on each tube 1/4" beyond the tie-down slots. Use a buffer tube cutter to cut each tube at the mark, and remove the excess tube from each fiber group. (Figure 34)

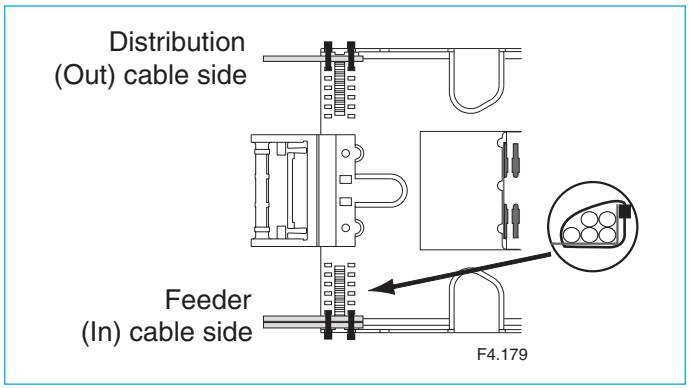

Figure 35.

10.1.4 Wrap the end of the cut buffer tube with loose buffer tube (LBT) wrap and secure the tubes to the tray with tie wraps. Tubes will stack under the tie wrap as shown. (Figure 35)

10.1.5 Arrange the fiber around the tray for storage. Replace the tray cover.

10.1.6 Repeat Steps 1 - 5 for each tray until all fiber has been stored in a tray.

10.2 Central core tube cable - stranded fiber (alternative method)

If funnels are not used, route both central core tubes directly onto the feeder side of the bottom splice organizer tray. Attach the core tubes with two tie wraps. The unspliced fibers are stored in the bottom tray. Remove the splice modules if necessary. Add intertray jumpers

10.3 Central core tube and loose buffer tube cable - ribbon fiber

Route central core tubes or buffer tubes into a FOSC ACC basket. Follow instructions included with the FOSC ACC basket to route the ribbons onto upper trays for splicing using ribbon-sized transportation tubes. Ribbons can not be stored on a single tray. Slack has to be pulled back to the basket after splicing. A ribbon tray is available for the FOSC 400 D5 only (FOSC ACC D Tray Ribn-24 kit). Ribbons can be stored on that tray as directed in the instructions included with the tray.

10.4 Add/remove splice trays

Additional splice trays are available in the FOSC ACC C and D tray kits. To add splice trays, put the tray support latch down, hold the tray vertically over the tray holder bracket, and insert the tray hinge into the next unoccupied slot on the tray holder bracket. Put the tray support latch up to lower the tray.

To remove splice trays, reverse this procedure. (Figure 36)

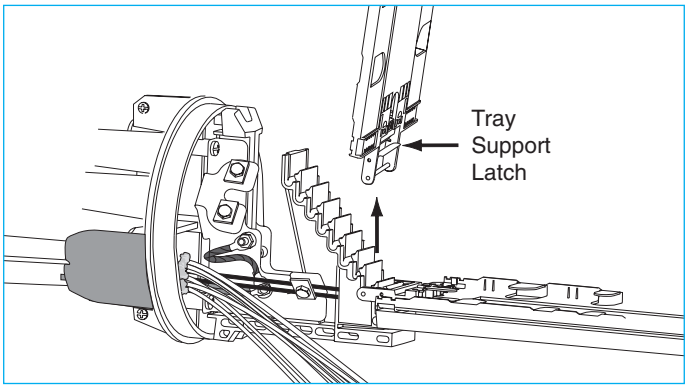

Figure 36.

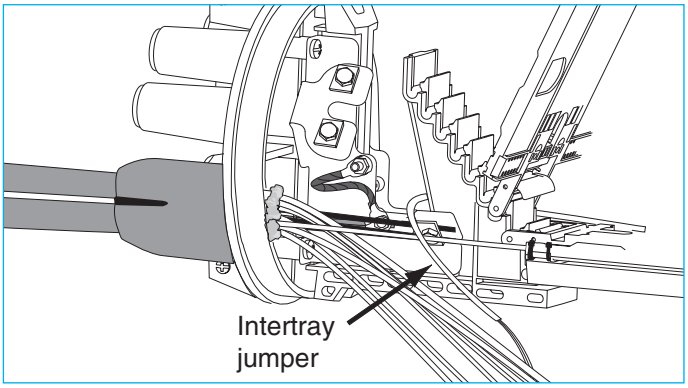

Figure 37.

10.5 Add intertray jumpers

If fiber placed on one tray is to be spliced with fiber from another tray or basket, you must use an intertray jumper to route the fiber to the desired tray. To create an intertray jumper, follow these steps:

10.5.1 Place appropriate intertray identification markers on a transportation tube. (Intertray ID markers are marked "1TO" through "8TO" and "1" through "8", to indicate which tray the jumper came from and which tray it is going to.)

10.5.2 Thread the desired fibers through the marked transportation tube (now called the intertray jumper).

10.5.3 Secure one end of the intertray jumper to the originating splice tray with two tie wraps. If you have to remove existing tie wraps, cut and replace them one at a time to avoid moving existing transportation tubes.

10.5.4 Guide the jumper through the opening in the tray mounting bracket to the appropriate destination tray and position it in the tray. (Figure 37)

10.5.5 With a pen, mark the jumper 1/4" beyond the tie wrap slot. Use the buffer tube cutter to cut the jumper at the mark. Place LBT wrap at the end of the cut tube and secure the jumper to the splice tray with two tie wraps. The fibers may now be stored or spliced.

10.6 Splice fibers and store on trays

Fiber splicing should be done in compliance with company-approved practices. This section outlines some basic splice organizing techniques to be followed.

10.6.1 Always begin splicing with the bottom tray. Lift the remaining trays and secure them with the tray support on the underside of the second tray.

10.6.2 Remove all stored, unspliced fibers from the tray and clean those that will be spliced. Refer to the splice manufacturer's instructions for directions on fiber splicing.

10.6.3 Store the first completed splice in the top splice slot (the slot farthest from the hinge). Coil the slack loops around the tray in an orderly fashion. The splice modules can be moved or removed to accommodate your splice arrangement; however, the lowest splice module (the one closest to the hinge) cannot be closer to the hinge than its position in Figure 39 (see next page) indicates for the FOSC 400 D5 closure. No more than six modules can be placed in one splice tray for the FOSC 400 D5 closure; no more than two for the FOSC 400 C5 closure. Splices accommodated by this closure are listed in Section 1.

Note: Protect and strain-relieve fusion splices with fusion splice support sleeves or similar company-approved devices. It is not necessary to use silicone or similar compounds to secure the fibers in the splice holders.

10.6.4 Subsequent splices should be stored in the tray from the top slot down. Slack loops can be secured under the tabs around the outside edges of the tray and in the spaces between splice modules. (Figure 38, see next page)

10.6.5 When you have completed all the splices in the tray, replace the tray cover.

10.6.6 Secure all trays to the bottom tray bracket with the Velcro strap as shown. (Figure 39, see next page)

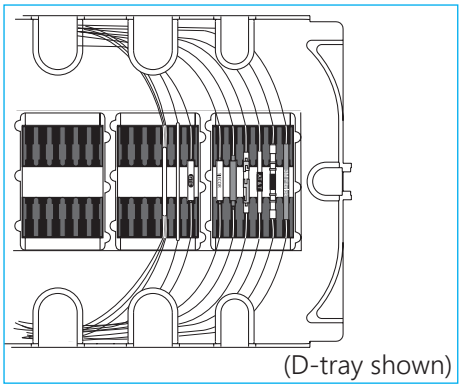

Figure 38.

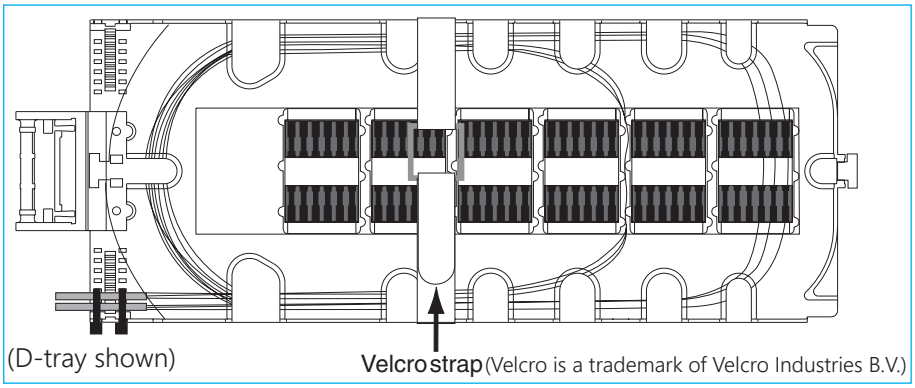

Figure 39.

11 Closing and mounting closure

11.1 Install dome

11.1.1 If desiccant is to be used (optional - not supplied) install 150 grams of desiccant on top of the uppermost splice organizer tray. Secure it in place with the supplied Velcro fastener strap.

11.1.2 Clean the o-ring and the o-ring seating area with a clean, dry cloth. Use clean water or alcohol wipe if necessary. Sealing surfaces must be free of contaminants such as cable grease, cable threads, fibers, dirt, and dust. Inspect for damage. Reinstall the o-ring.

11.1.3 Mount dome on base, aligning white marks or arrows on dome and base. If desired, use FOSC ACC closure dome holder to hold dome and base together while installing clamp. Install clamp around the base/dome interface, removing dome holder, if used.

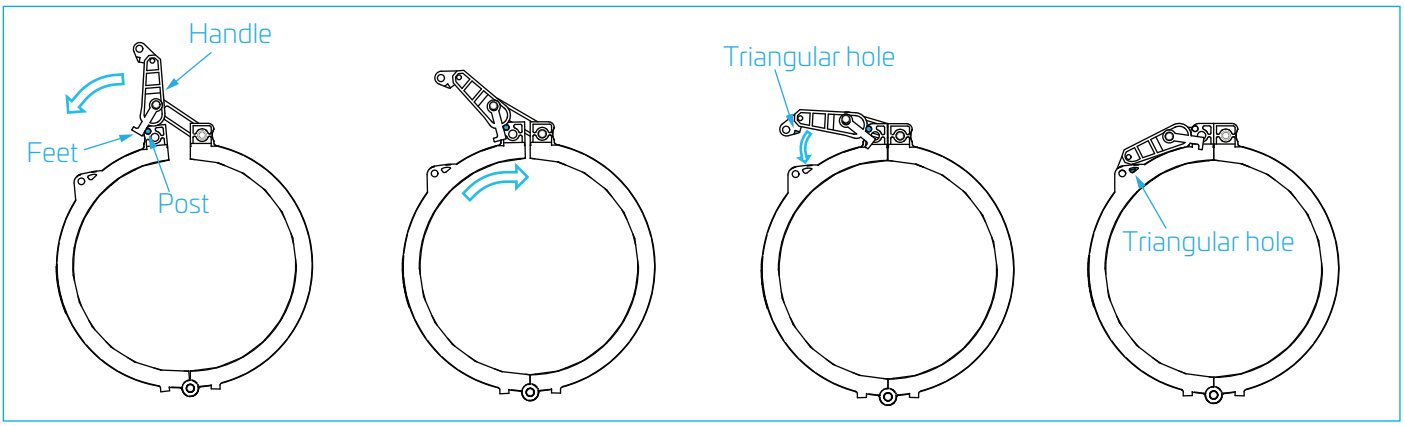

Figure 40.

11.1.4 Position feet of handle in front of the two posts and push down on the handle to pull the two halves of the clamp together. See Figure 40, Steps 1-3.

11.1.5 Continue to push handle down until the small pin on the handle snaps into the triangular hole in the clamp. See Figure 40, Step 4.

11.1.6 A security lock or tie wrap may be inserted.

11.2 Test seals (kits with valves only)

Ensure that all heat-shrinkable parts are cool to the touch. Pressure-test the closure with no more than 5 psi. Thoroughly soap all seals and the valve to check for seal integrity.

<u>Important</u>: After flash testing, bleed all pressure from the D5 closure through the valve.

11.3 Manhole installation for the FOSC 400 D5 closure kit

When the closure has successfully completed testing, it can be mounted for storage. For manhole installations, slide the mounting brackets over a mounting rod or pipe (1-1/4" galvanized water pipe). Mount the brackets to the dome and base as shown. (Figure 41)

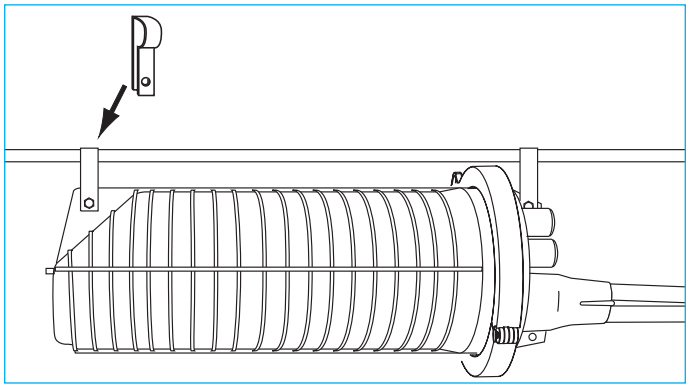

Figure 41.

For aerial applications, use the optional FOSC ACC closure aerial clamps kit. For wall or pole mount applications, use the FOSC ACC D closure pole mount kit.

Note: The FOSC 400 C5 closure requires the FOSC-ACC Wall/Pole Mount kit for storage on a pole or wall. Mounting instructions are included with the kit.

To strand-mount the FOSC 400 C5 closure, use either the FOSC-ACC-UNIV-AERIAL-CLMP or the FOSC-ACC-LASHING STRAPS kit.

To pole or wall-mount the FOSC 400 C5 closure, use the FOSC-ACC Wall/Pole Mount kit.

12 Adding cables

Adding cables to a sealed closure requires additional cable seal kits. Cable seal kits are available in several configurations, as described by the kit naming convention described below:

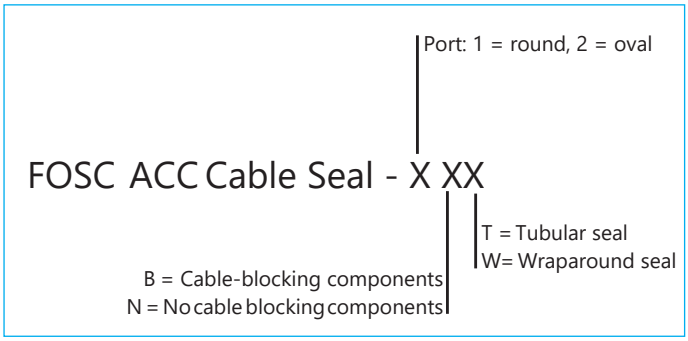

13 Removing cable seals

Important: When removing cable seals from a closure, first remove the dome and make sure that the cable's strength members are securely attached to the closure's base.

13.1 Re-heat the seal with a hot-air gun.

13.2 Lightly score the seal with a knife until a split appears in the seal.

13.3 Apply heat to the split until it runs the length of the seal.

13.4 Pull the seal away from the cables and closure with a pair of pliers.

13.5 Any old adhesive remaining on the cables and closure can remain in place.

13.6 If necessary, cables can be replaced

14 Disclaimer

All trademarks identified by ® are registered trademarks in the US and may be registered in other countries. All third party product names, trademarks and registered trademarks are property of their respective owners.

This product may be covered by one or more U.S. patents or their foreign equivalents. For patents, see www.cs-pat.com.

This document is not intended to modify or supplement any specifications or warranties relating to CommScope products or services.

15 Contact information

Visit our website or contact your local CommScope® representative for more information. www.commscope.com.

For technical assistance, customer service, or to report any missing/damaged parts, visit us at: http://www.commscope.com/SupportCenter.