WB-K410-B

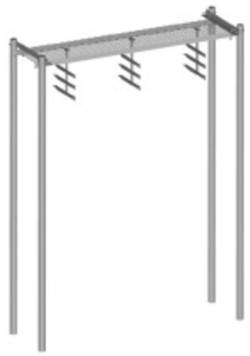

Safety Grated Waveguide Bridge Kit, 24 in x 10 ft, with four 13 ft 4 in direct burial posts

Product Classification

Product Type	Waveguide bridge kit

General Specifications

Application	Direct burial
Cable Runs, quantity	24
Pipe, quantity	4

Dimensions

Height	4064 mm | 160 in
Width	609.6 mm | 24 in
Length	3048 mm | 120 in
Pipe Length	4,053.84 mm | 159.6 in

©2024 CommScope, Inc. All rights reserved. CommScope and the CommScope logo are registered trademarks of CommScope and/or its affiliates in the U.S. and other countries. For additional trademark information see https://www.commscope.com/trademarks. All product names, trademarks and registered trademarks are property of their respective owners. Revised: August 20, 2024

WB-K410-B

Outline Drawing

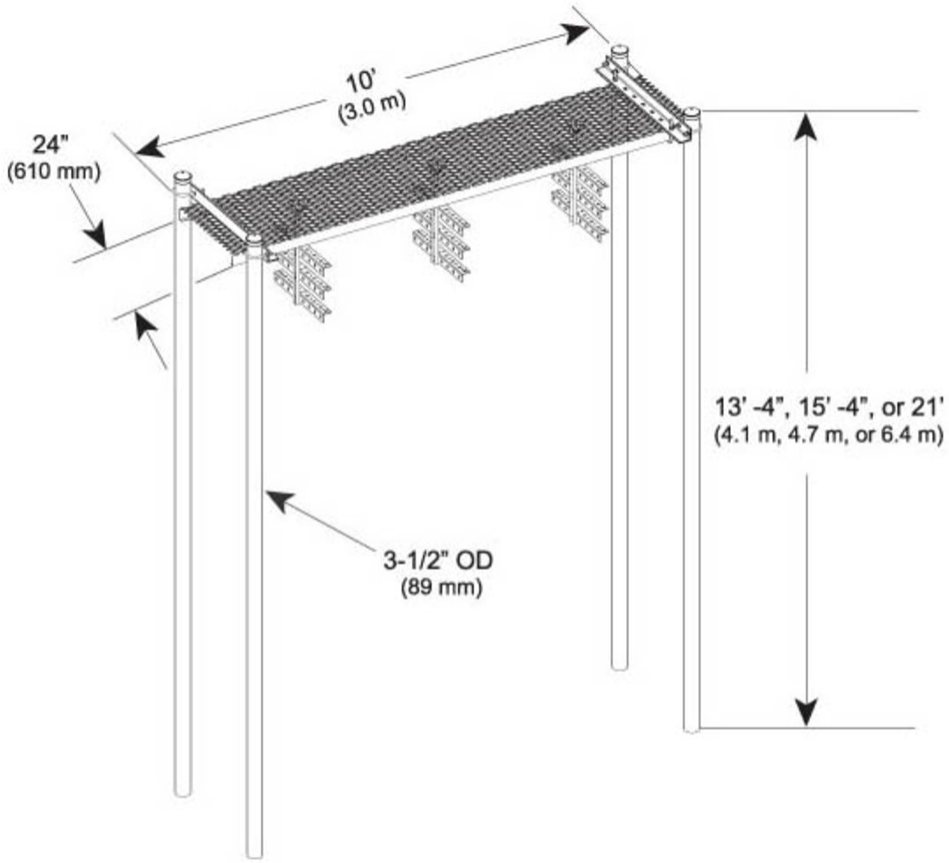

Material Specifications

Material Type	Hot dip galvanized steel

Packaging and Weights

Included	Caps | Channel | Hardware | Posts | Support brackets | Trapeze
Packaging quantity	1
Weight, net	270.4 kg | 596.129 lb

Regulatory Compliance/Certifications

Agency	Classification
CHINA-ROHS	Above maximum concentration value
ISO 9001:2015	Designed, manufactured and/or distributed under this quality management system

©2024 CommScope, Inc. All rights reserved. CommScope and the CommScope logo are registered trademarks of CommScope and/or its affiliates in the U.S. and other countries. For additional trademark information see https://www.commscope.com/trademarks. All product names, trademarks and registered trademarks are property of their respective owners. Revised: August 20, 2024

WB-K410-B

ROHS	Compliant/Exempted
UK-ROHS	Compliant/Exempted

Included Products

MF-130	–	Direct Burial Pipe Column, 13 ft 4 in
WB-CS24-3	–	Safety Grated Channel Support, 24 in wide for 3-1/2 in OD pipe
WB-CY210	–	Safety Grated Waveguide Bridge Channel, 24 in x 10 ft
WB-T24-3	–	Trapeze Kit, triple tee, 24 in wide, three rungs

©2024 CommScope, Inc. All rights reserved. CommScope and the CommScope logo are registered trademarks of CommScope and/or its affiliates in the U.S. and other countries. For additional trademark information see https://www.commscope.com/trademarks. All product names, trademarks and registered trademarks are property of their respective owners. Revised: August 20, 2024

MF-130

Direct Burial Pipe Column, 13 ft 4 in

Product Classification

Product Type	Pipe column

General Specifications

Application	Direct burial
Mounting	Waveguide bridge support bracket
Pipe, quantity	1

Dimensions

Height	4064 mm | 160 in
Width	88.9 mm | 3.5 in
Length	88.9 mm | 3.5 in
Pipe Length	4,053.84 mm | 159.6 in
Pipe Outer Diameter	88.9 mm | 3.5 in

©2024 CommScope, Inc. All rights reserved. CommScope and the CommScope logo are registered trademarks of CommScope and/or its affiliates in the U.S. and other countries. For additional trademark information see https://www.commscope.com/trademarks. All product names, trademarks and registered trademarks are property of their respective owners. Revised: August 20, 2024

MF-130

Outline Drawing

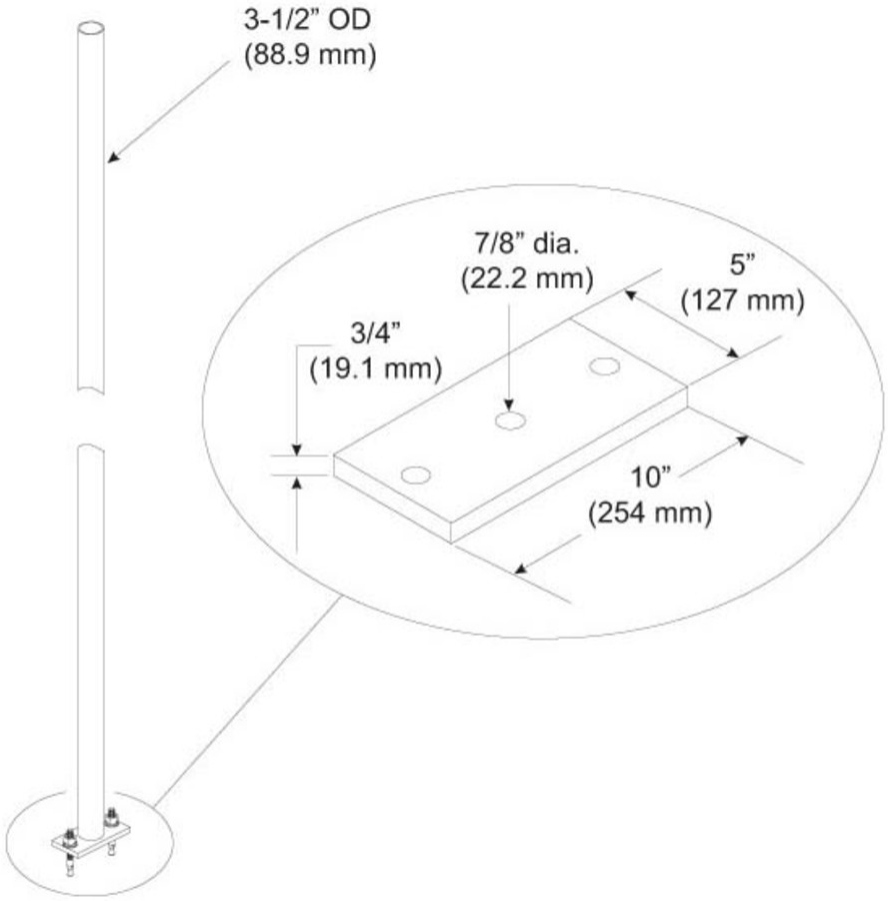

Material Specifications

Material Type	Hot dip galvanized steel

Packaging and Weights

Included	Anchors | Pipe
Packaging quantity	1
Weight, net	45.8 kg | 100.972 lb

Regulatory Compliance/Certifications

Agency	Classification

©2024 CommScope, Inc. All rights reserved. CommScope and the CommScope logo are registered trademarks of CommScope and/or its affiliates in the U.S. and other countries. For additional trademark information see https://www.commscope.com/trademarks. All product names, trademarks and registered trademarks are property of their respective owners. Revised: August 20, 2024

MF-130

CHINA-ROHS	Above maximum concentration value
ISO 9001:2015	Designed, manufactured and/or distributed under this quality management system
ROHS	Compliant/Exempted
UK-ROHS	Compliant/Exempted

©2024 CommScope, Inc. All rights reserved. CommScope and the CommScope logo are registered trademarks of CommScope and/or its affiliates in the U.S. and other countries. For additional trademark information see https://www.commscope.com/trademarks. All product names, trademarks and registered trademarks are property of their respective owners. Revised: August 20, 2024

WB-CS24-3

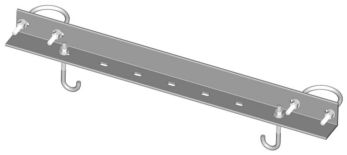

Safety Grated Channel Support, 24 in wide for 3-1/2 in OD pipe

Product Classification

Product Type	Support bracket

General Specifications

Application	Waveguide bridge kit, 24 in
Mounting	Pipe, 88.9 mm (3-1/2 in) OD

Dimensions

Height	101.6 mm | 4 in
Width	812.8 mm | 32 in
Length	101.6 mm | 4 in

©2024 CommScope, Inc. All rights reserved. CommScope and the CommScope logo are registered trademarks of CommScope and/or its affiliates in the U.S. and other countries. For additional trademark information see https://www.commscope.com/trademarks. All product names, trademarks and registered trademarks are property of their respective owners. Revised: August 20, 2024

WB-CS24-3

Outline Drawing

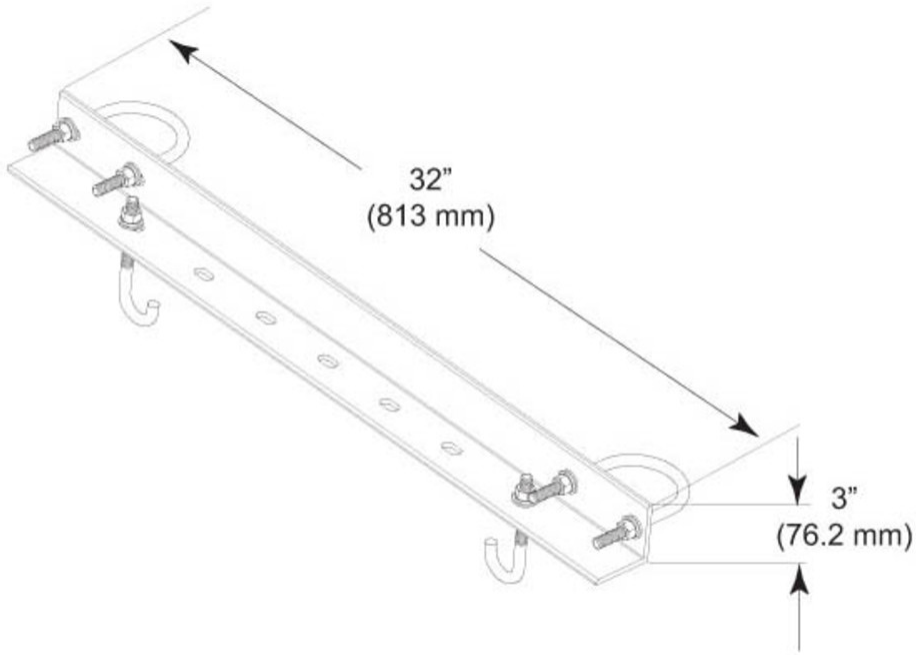

Material Specifications

Material Type	Hot dip galvanized steel

Packaging and Weights

Included	Channel support bracket | Hardware
Packaging quantity	1
Weight, net	8.2 kg | 18.078 lb

Regulatory Compliance/Certifications

Agency	Classification
CHINA-ROHS	Above maximum concentration value
ISO 9001:2015	Designed, manufactured and/or distributed under this quality management system
ROHS	Compliant/Exempted
UK-ROHS	Compliant/Exempted

©2024 CommScope, Inc. All rights reserved. CommScope and the CommScope logo are registered trademarks of CommScope and/or its affiliates in the U.S. and other countries. For additional trademark information see https://www.commscope.com/trademarks. All product names, trademarks and registered trademarks are property of their respective owners. Revised: August 20, 2024

WB-CY210

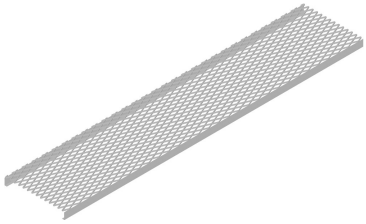

Safety Grated Waveguide Bridge Channel, 24 in x 10 ft

Product Classification

Product Type	Waveguide bridge channel

General Specifications

Application	Waveguide bridge kit, 24 in

Dimensions

Height	76.2 mm | 3 in
Width	609.6 mm | 24 in
Length	3048 mm | 120 in

©2024 CommScope, Inc. All rights reserved. CommScope and the CommScope logo are registered trademarks of CommScope and/or its affiliates in the U.S. and other countries. For additional trademark information see https://www.commscope.com/trademarks. All product names, trademarks and registered trademarks are property of their respective owners. Revised: May 18, 2024

WB-CY210

Outline Drawing

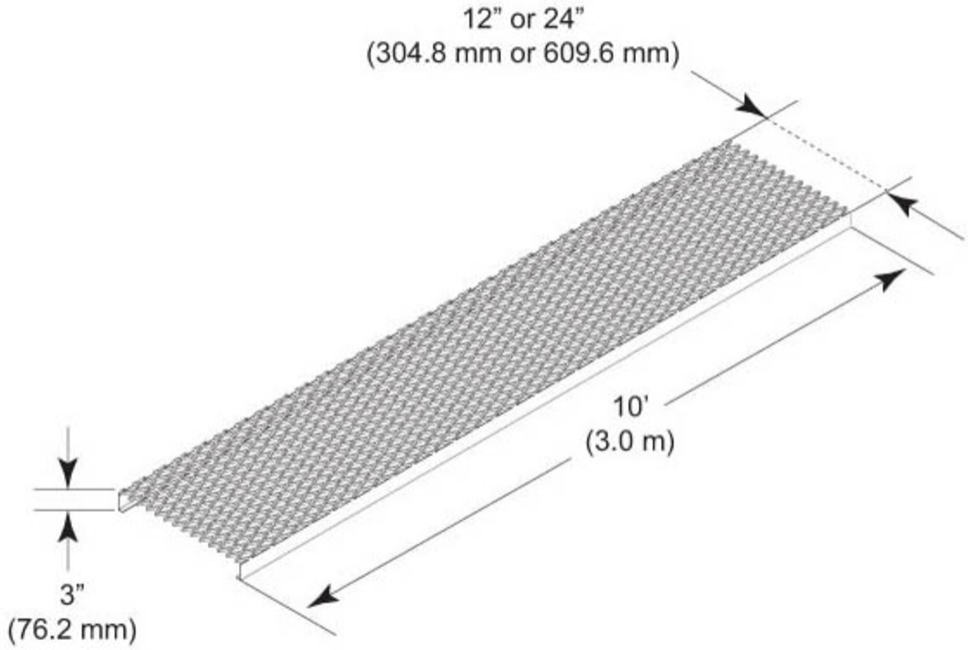

Material Specifications

Material Type	Hot dip galvanized steel

Packaging and Weights

Included	Bridge channel
Packaging quantity	1
Weight, net	50.4 kg | 111.113 lb

Regulatory Compliance/Certifications

Agency	Classification
CHINA-ROHS	Above maximum concentration value
ISO 9001:2015	Designed, manufactured and/or distributed under this quality management system
ROHS	Compliant/Exempted
UK-ROHS	Compliant/Exempted

©2024 CommScope, Inc. All rights reserved. CommScope and the CommScope logo are registered trademarks of CommScope and/or its affiliates in the U.S. and other countries. For additional trademark information see https://www.commscope.com/trademarks. All product names, trademarks and registered trademarks are property of their respective owners. Revised: May 18, 2024

©2024 CommScope, Inc. All rights reserved. CommScope and the CommScope logo are registered trademarks of CommScope and/or its affiliates in the U.S. and other countries. For additional trademark information see https://www.commscope.com/trademarks. All product names, trademarks and registered trademarks are property of their respective owners. Revised: May 18, 2024

WB-T24-3

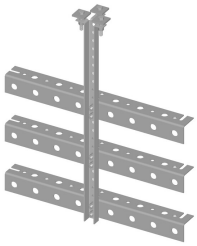

Trapeze Kit, triple tee, 24 in wide, three rungs

Product Classification

Product Type	Trapeze kit

General Specifications

Application	Waveguide bridge kit, 24 in
Cable Runs, quantity	24
Hole, quantity	24
Mounting	Waveguide bridge channel
Rungs, quantity	3

Dimensions

Height	76.2 mm | 3 in
Width	609.6 mm | 24 in
Length	635 mm | 25 in
Hole Size	3/4 in | 7/16 in

©2024 CommScope, Inc. All rights reserved. CommScope and the CommScope logo are registered trademarks of CommScope and/or its affiliates in the U.S. and other countries. For additional trademark information see https://www.commscope.com/trademarks. All product names, trademarks and registered trademarks are property of their respective owners. Revised: May 22, 2024

WB-T24-3

Outline Drawing

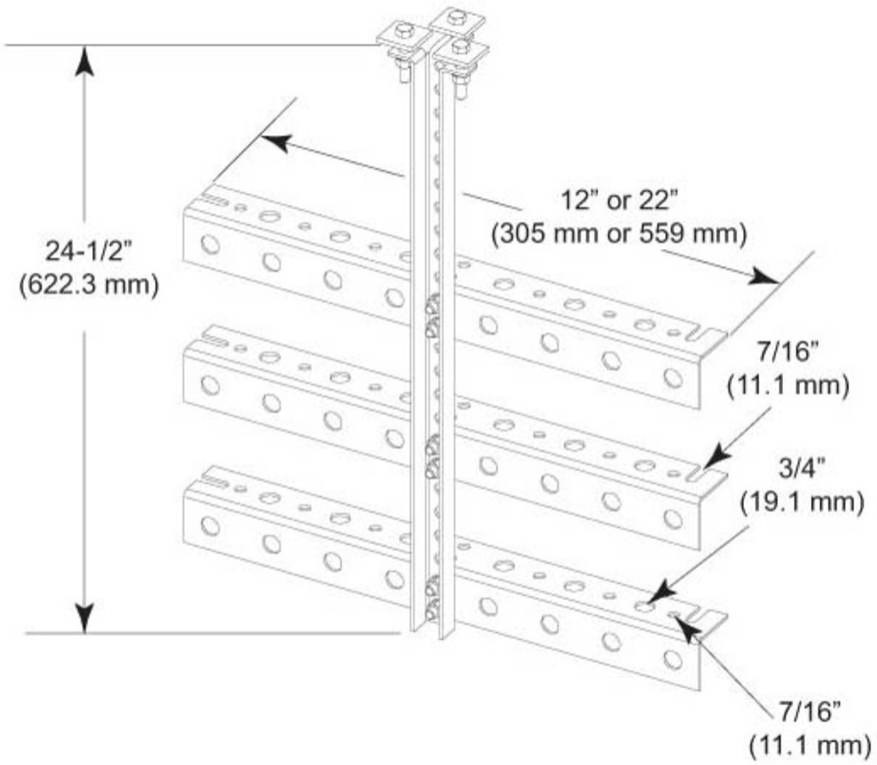

Material Specifications

Material Type	Hot dip galvanized steel

Packaging and Weights

Included	Angle brackets | Mounting hardware
Packaging quantity	1
Weight, net	5.9 kg | 13.007 lb

Regulatory Compliance/Certifications

Agency	Classification
ISO 9001:2015	Designed, manufactured and/or distributed under this quality management system

©2024 CommScope, Inc. All rights reserved. CommScope and the CommScope logo are registered trademarks of CommScope and/or its affiliates in the U.S. and other countries. For additional trademark information see https://www.commscope.com/trademarks. All product names, trademarks and registered trademarks are property of their respective owners. Revised: May 22, 2024