L44M

LC Male for 1/2 in LDF4-50A cable

OBSOLETE

This product was discontinued on: September 7, 2008

Product Classification

Product Type	Wireless and radiating connector
Product Brand	HELIAX®

General Specifications

Body Style	Straight
Cable Family	LDF4-50A
Inner Contact Attachment Method	Solder
Inner Contact Plating	Unplated
Interface	LC Male
Mounting Angle	Straight
Outer Contact Attachment Method	Self-flare
Outer Contact Plating	Unplated
Pressurizable	No

Dimensions

Length	91.44 mm | 3.6 in
Diameter	22.86 mm | 0.9 in
Nominal Size	1/2 in

Outline Drawing

©2024 CommScope, Inc. All rights reserved. CommScope and the CommScope logo are registered trademarks of CommScope and/or its affiliates in the U.S. and other countries. For additional trademark information see https://www.commscope.com/trademarks. All product names, trademarks and registered trademarks are property of their respective owners. Revised: July 15, 2024

L44M

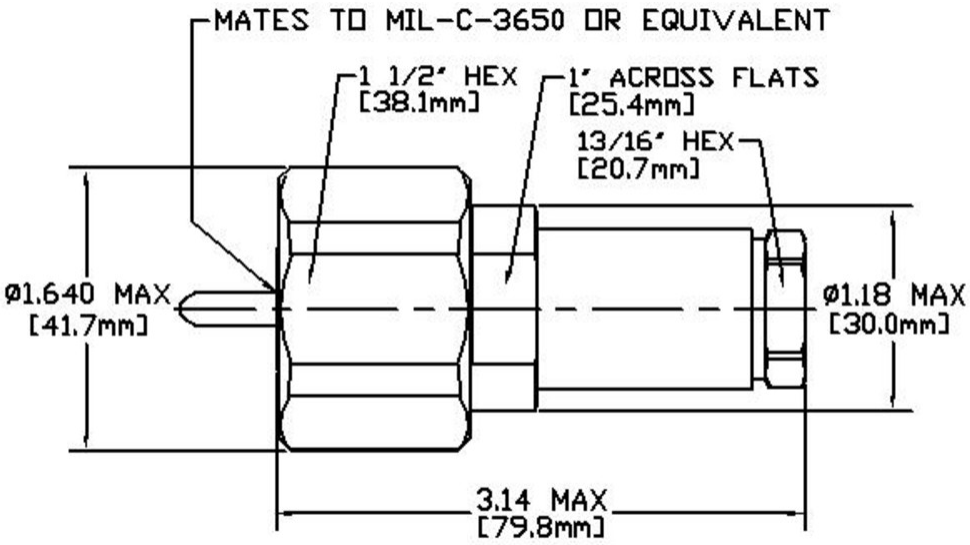

Electrical Specifications

Insertion Loss Coefficient, typical	0.05
Cable Impedance	50 ohm
Operating Frequency Band	0 – 7000 MHz

VSWR/Return Loss

Frequency Band	VSWR	Return Loss (dB)
45–1800 MHz	1.33	17
1800–4400 MHz	1.38	16
4400–6200 MHz	1.68	12
6200–7900 MHz	1.79	11
7900–8800 MHz	3.01	6

Mechanical Specifications

Attachment Durability	25 cycles
Connector Retention Tensile Force	889.64 N | 200 lbf
Connector Retention Torque	5.42 N-m | 47.998 in lb

Environmental Specifications

Attenuation, Ambient Temperature	20 °C | 68 °F

©2024 CommScope, Inc. All rights reserved. CommScope and the CommScope logo are registered trademarks of CommScope and/or its affiliates in the U.S. and other countries. For additional trademark information see https://www.commscope.com/trademarks. All product names, trademarks and registered trademarks are property of their respective owners. Revised: July 15, 2024

Average Power, Ambient Temperature	40 °C | 104 °F

Packaging and Weights

Weight, net	318 g | 0.701 lb

* Footnotes

Insertion Loss Coefficient, typical	0.05√¯freq (GHz) (not applicable for elliptical waveguide)

©2024 CommScope, Inc. All rights reserved. CommScope and the CommScope logo are registered trademarks of CommScope and/or its affiliates in the U.S. and other countries. For additional trademark information see https://www.commscope.com/trademarks. All product names, trademarks and registered trademarks are property of their respective owners. Revised: July 15, 2024