E15V90P20

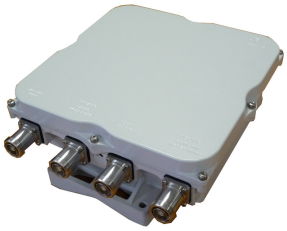

SpectrumShare Passive Filter for GSM 900 and UMTS 900

This product will be discontinued on: December 30, 2024

Product Classification

Product Type	Diplexer

General Specifications

Application	Outdoor
AISG Carrier	2176 KHz ± 100 ppm
Antenna Interface	7-16 DIN Female
Connector Interface	7-16 DIN Female

Dimensions

Height	280 mm | 11.024 in
Width	92.5 mm | 3.642 in
Depth	279 mm | 10.984 in

©2024 CommScope, Inc. All rights reserved. CommScope and the CommScope logo are registered trademarks of CommScope and/or its affiliates in the U.S. and other countries. For additional trademark information see https://www.commscope.com/trademarks. All product names, trademarks and registered trademarks are property of their respective owners. Revised: June 26, 2024

E15V90P20

Outline Drawing

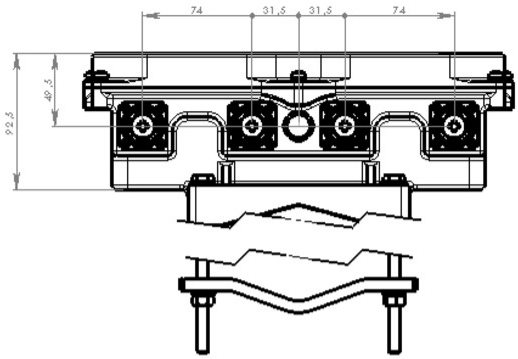

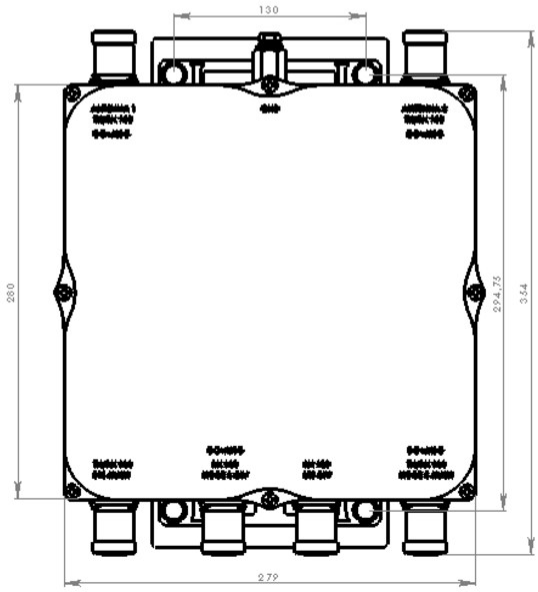

Electrical Specifications

3rd Order IMD Test Method	Two +43 dBm carriers
3rd Order IMD, typical	-158 dBm
Isolation Between Paths, minimum	50 dB
Lightning Surge Current	5 kA
Lightning Surge Current Waveform	8/20 waveform
Peak Power, maximum	1 kW

Electrical Specifications, Rx (Uplink)

Frequency Band	880 – 915 MHz

©2024 CommScope, Inc. All rights reserved. CommScope and the CommScope logo are registered trademarks of CommScope and/or its affiliates in the U.S. and other countries. For additional trademark information see https://www.commscope.com/trademarks. All product names, trademarks and registered trademarks are property of their respective owners. Revised: June 26, 2024

Insertion Loss, maximum, specific	3.7 dB (UMTS diversity) | 4.5 dB (GSM main)
Insertion Loss, typical, specific	3.5 dB (UMTS diversity) | 4 dB (GSM main)
Return Loss, minimum	16 dB
Isolation, minimum, specific	22 dB (GSM main to UMTS diversity)
License Band	UMTS 900
Port Designation	Antenna port 1

Electrical Specifications 2, Rx (Uplink)

Frequency Band	880 – 915 MHz
Isolation, minimum, specific	22 dB (UMTS main to GSM diversity)
License Band	GSM
Port Designation	Antenna port 2
Insertion Loss, maximum, specific	3.7 dB (GSM diversity) | 4.5 dB (UMTS main)
Insertion Loss, typical, specific	3.5 dB (GSM diversity) | 4 dB (UMTS main)
Return Loss, minimum	16 dB

Electrical Specifications, Tx (Downlink)

Frequency Band	925 – 960 MHz
Isolation, minimum, specific	33 dB (GSM main to UMTS diversity)
License Band	GSM
Input Power, RMS, maximum	126 W
Insertion Loss, typical	0.35 dB
Return Loss, minimum	18 dB

Electrical Specifications 2, Tx (Downlink)

Frequency Band	925 – 960 MHz
Insertion Loss, typical	0.35 dB
Isolation, minimum, specific	33 dB (UMTS main to GSM diversity)
License Band	UMTS 900
Return Loss, minimum	18 dB

Electrical Specifications, AISG

Insertion Loss, maximum	0.1 dB
Return Loss, minimum	20 dB

©2024 CommScope, Inc. All rights reserved. CommScope and the CommScope logo are registered trademarks of CommScope and/or its affiliates in the U.S. and other countries. For additional trademark information see https://www.commscope.com/trademarks. All product names, trademarks and registered trademarks are property of their respective owners. Revised: June 26, 2024

E15V90P20

Block Diagram

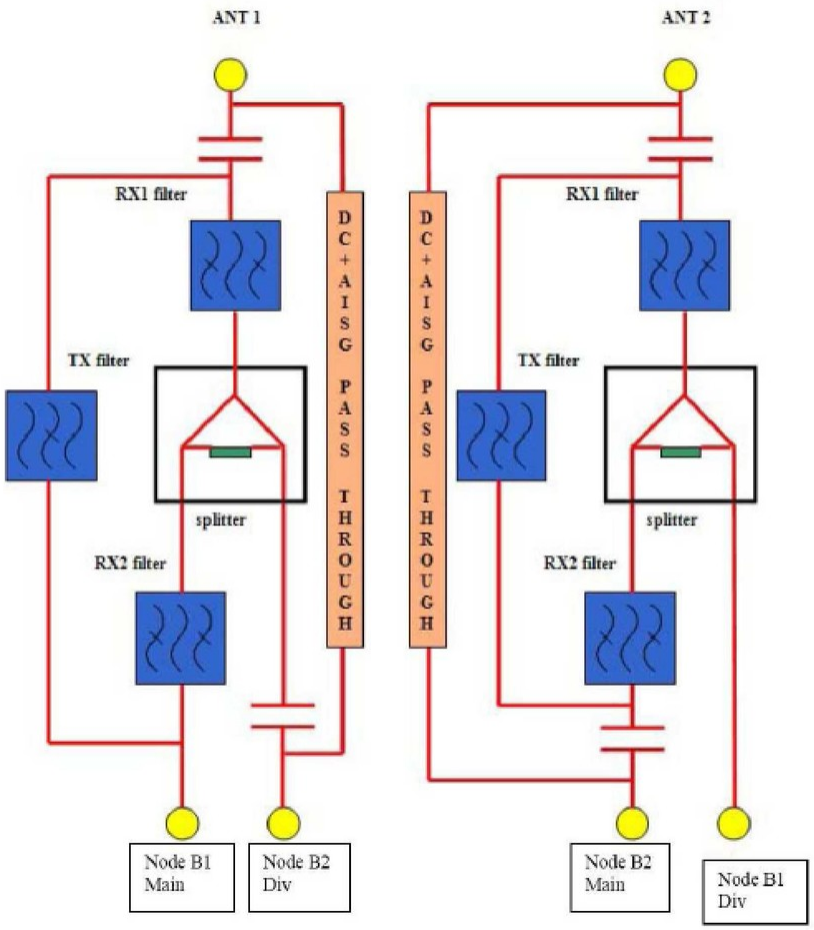

Environmental Specifications

Operating Temperature	-40 °C to +75 °C (-40 °F to +167 °F)
Ingress Protection Test Method	IEC 60529:2001, IP68

Packaging and Weights

Included	Mounting hardware
Weight, net	7.5 kg | 16.535 lb

Regulatory Compliance/Certifications

Agency	Classification

©2024 CommScope, Inc. All rights reserved. CommScope and the CommScope logo are registered trademarks of CommScope and/or its affiliates in the U.S. and other countries. For additional trademark information see https://www.commscope.com/trademarks. All product names, trademarks and registered trademarks are property of their respective owners. Revised: June 26, 2024

ISO 9001:2015	Designed, manufactured and/or distributed under this quality management system

©2024 CommScope, Inc. All rights reserved. CommScope and the CommScope logo are registered trademarks of CommScope and/or its affiliates in the U.S. and other countries. For additional trademark information see https://www.commscope.com/trademarks. All product names, trademarks and registered trademarks are property of their respective owners. Revised: June 26, 2024