# E15R02P10

SpectrumShare Active Filter for GSM 900 and UMTS 900

This product will be discontinued on: December 30, 2024

## Product Classification

| | |
|---|---|
| **Product Type** | Diplexer |

## General Specifications

| | |
|---|---|
| **AISG Connector** | 8-pin DIN Female, circular |
| **AISG Connector Standard** | IEC 60130-9 |
| **Connector Interface** | 7-16 DIN Female |
| **Connector Interface Style** | Long neck |

## Dimensions

| | |
|---|---|
| **Height** | 280 mm \| 11.024 in |
| **Width** | 140 mm \| 5.512 in |
| **Depth** | 170 mm \| 6.693 in |



©2024 CommScope, Inc. All rights reserved. CommScope and the CommScope logo are registered trademarks of CommScope and/or its affiliates in the U.S. and other countries. For additional trademark information see https://www.commscope.com/trademarks. All product names, trademarks and registered trademarks are property of their respective owners. Revised: June 26, 2024

# E15R02P10

## Outline Drawing

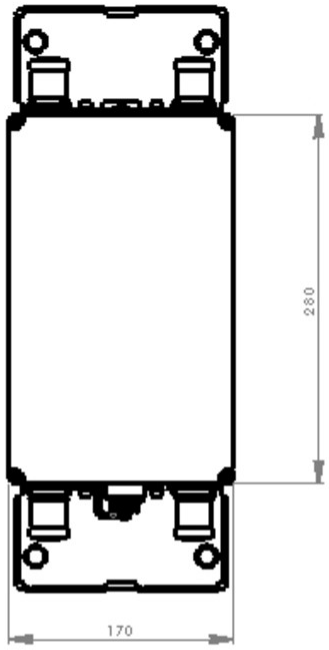


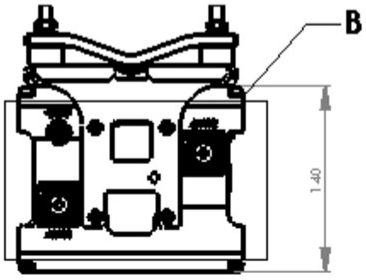


## Electrical Specifications

| | |
|---|---|
| **Input RF CW Power, no damage, maximum** | 43 dBm @ 1 min |
| **Failure Current Consumption** | 185 mA ±10 mA @ 10–18 V |
| **Lightning Protection** | dc Ground |
| **Lightning Surge Current** | 5 kA |
| **Lightning Surge Current Waveform** | 8/20 waveform |
| **Operating Current at Voltage** | 100 mA ±10 mA @ 10–12 V \| 140 mA ±15 mA @ 12 V |
| **Overcurrent Protection** | 2 A |
| **Overcurrent Protection Tolerance** | ±0.1 A |
| **Power Consumption, maximum** | 2 W |



©2024 CommScope, Inc. All rights reserved. CommScope and the CommScope logo are registered trademarks of CommScope and/or its affiliates in the U.S. and other countries. For additional trademark information see https://www.commscope.com/trademarks. All product names, trademarks and registered trademarks are property of their respective owners. Revised: June 26, 2024

| | |
|---|---|
| **Signaling Interface at Frequency** | 3 dBm @ 2,176 MHz |
| **Signaling Interface Tolerance** | ±2 dBm |
| **Voltage** | 0–48 V, survival \| 7–30 V, operational |

## Electrical Specifications, Rx (Uplink)

| | |
|---|---|
| **Filter Attenuation, minimum** | 45 dB |
| **Frequency Band** | 880 – 915 MHz |
| **Gain** | 12 dB |
| **Gain Ripple, maximum, specific** | 1 dB (UMTS diversity) \| 1.5 dB (GSM main) |
| **Gain Tolerance** | ±1 |
| **Group Delay Variation at Frequency, maximum** | 10 ns @ 240.00 MHz \| 70 ns @ 5.00 MHz |
| **Insertion Loss Ripple, Bypass Mode, specific** | 0.8 dB (UMTS diversity) \| 1.3 dB (GSM main) |
| **Insertion Loss, Bypass Mode, typical** | 6 dB |
| **Return Loss, Bypass Mode, minimum** | 17 dB |
| **Return Loss, minimum** | 17 dB |
| **Isolation, minimum, specific** | 20 dB (GSM main to UMTS diversity) \| 36 dB (GSM main to GSM diversity) \| 36 dB (GSM main to UMTS main) \| 36 dB (UMTS diversity to GSM diversity) \| 36 dB (UMTS diversity to UMTS main) |
| **License Band** | UMTS 900 |
| **Noise Figure, Full Band at Temperature, typical** | 1.70 dB @ 25 °C |
| **Noise Figure, Mid Band at Temperature, typical** | 1.20 dB @ 25 °C |
| **Output 1 dB Compression Point, minimum** | 10 dBm |
| **Output IP3, minimum** | 23 dBm |
| **Port Designation** | Antenna port 1 |
| **Total Group Delay, maximum** | 180 ns |

## Electrical Specifications 2, Rx (Uplink)

| | |
|---|---|
| **Filter Attenuation, minimum** | 45 dB |
| **Frequency Band** | 880 – 915 MHz |
| **Gain** | 12 dB |
| **Gain Ripple, maximum, specific** | 1 dB (UMTS diversity) \| 1.5 dB (GSM main) |
| **Gain Tolerance** | ±1 |
| **Group Delay Variation at Frequency, maximum** | 10 ns @ 240.00 MHz \| 70 ns @ 5.00 MHz |
| **Isolation, minimum, specific** | 20 dB (GSM diversity to UMTS main) \| 36 dB (GSM diversity to GSM main) \| 36 dB (GSM diversity to UMTS diversity) \| 36 dB (UMTS |



©2024 CommScope, Inc. All rights reserved. CommScope and the CommScope logo are registered trademarks of CommScope and/or its affiliates in the U.S. and other countries. For additional trademark information see https://www.commscope.com/trademarks. All product names, trademarks and registered trademarks are property of their respective owners. Revised: June 26, 2024

| | |
|---|---|
| | main to GSM main) \| 36 dB (UMTS main to UMTS diversity) |
| **License Band** | GSM |
| **Noise Figure, Full Band at Temperature, typical** | 1.70 dB @ 25 °C |
| **Noise Figure, Mid Band at Temperature, typical** | 2.00 dB @ 25 °C |
| **Output 1 dB Compression Point, minimum** | 10 dBm |
| **Output IP3, mimimum** | 23 dBm |
| **Port Designation** | Antenna port 2 |
| **Total Group Delay, maximum** | 180 ns |
| **Insertion Loss Ripple, Bypass Mode, specific** | 0.8 dB (GSM diversity) \| 1.3 dB (UMTS main) |
| **Insertion Loss, Bypass Mode, typical** | 6 dB |
| **Return Loss, Bypass Mode, minimum** | 17 dB |
| **Return Loss, minimum** | 17 dB |

## Electrical Specifications, Tx (Downlink)

| | |
|---|---|
| **3rd Order IMD Test Method** | Two +43 dBm carriers |
| **3rd Order IMD, specific** | -107 dBm (antenna port 1) \| -95 dBm (GSM main) |
| **Filter Attenuation, minimum** | 50 dB |
| **Frequency Band** | 925 – 960 MHz |
| **Group Delay Variation at Frequency, maximum** | 65 ns @ 5.00 MHz |
| **License Band** | GSM |
| **Input Power, PEP, maximum** | 5000 W |
| **Total Group Delay, maximum** | 110 ns |
| **Insertion Loss Ripple, maximum** | 0.7 dB |
| **Insertion Loss, maximum** | 0.85 dB |
| **Return Loss, minimum** | 18 dB |

## Electrical Specifications 2, Tx (Downlink)

| | |
|---|---|
| **3rd Order IMD Test Method** | Two +43 dBm carriers |
| **3rd Order IMD, specific** | -107 dBm (antenna port 2) \| -95 dBm (UMTS main) |
| **Filter Attenuation, minimum** | 80 dBm |
| **Frequency Band** | 925 – 960 MHz |
| **Group Delay Variation at Frequency, maximum** | 65 ns @ 5.00 MHz |
| **Input Power, PEP, maximum** | 5000 W |



©2024 CommScope, Inc. All rights reserved. CommScope and the CommScope logo are registered trademarks of CommScope and/or its affiliates in the U.S. and other countries. For additional trademark information see https://www.commscope.com/trademarks. All product names, trademarks and registered trademarks are property of their respective owners. Revised: June 26, 2024

# E15R02P10

| | |
|---|---|
| **Insertion Loss Ripple, maximum** | 0.7 dB |
| **Insertion Loss, maximum** | 0.85 dB |
| **License Band** | UMTS 900 |
| **Return Loss, minimum** | 18 dB |
| **Total Group Delay, maximum** | 110 ns |



©2024 CommScope, Inc. All rights reserved. CommScope and the CommScope logo are registered trademarks of CommScope and/or its affiliates in the U.S. and other countries. For additional trademark information see https://www.commscope.com/trademarks. All product names, trademarks and registered trademarks are property of their respective owners. Revised: June 26, 2024

# E15R02P10

## Block Diagram

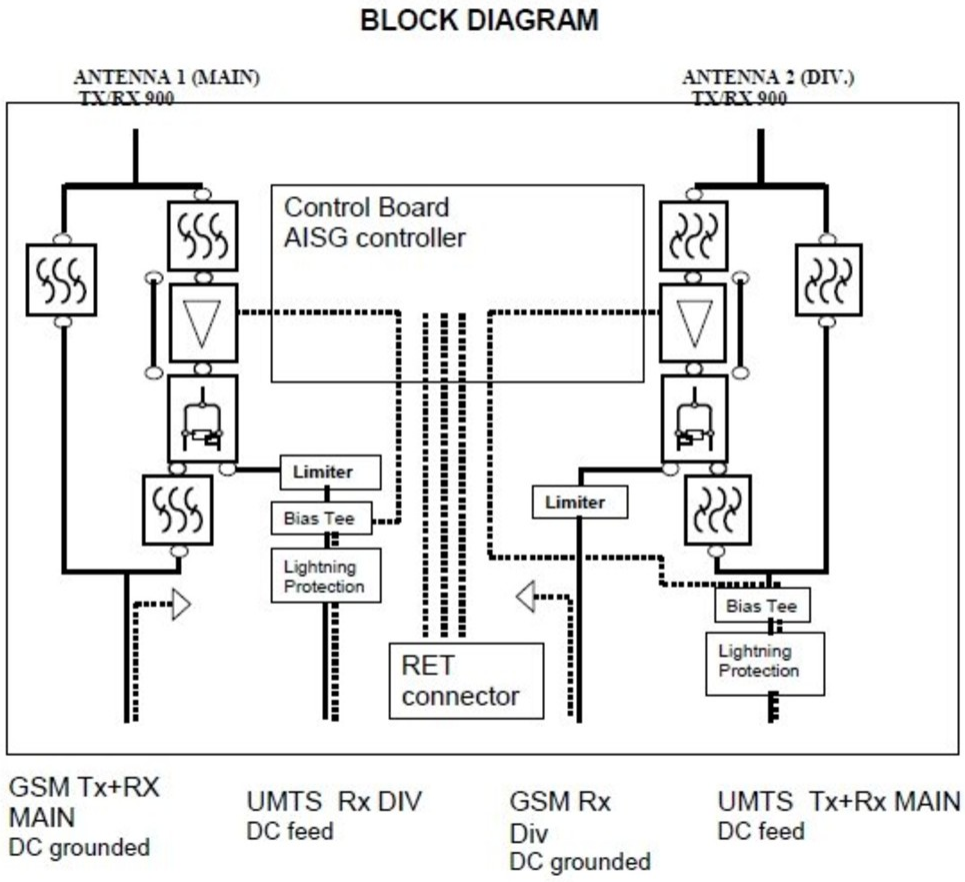


## Environmental Specifications

| | |
|---|---|
| **Operating Temperature** | -40 °C to +65 °C (-40 °F to +149 °F) |
| **Ingress Protection Test Method** | IEC 60529:2001, IP67 |

## Packaging and Weights

| | |
|---|---|
| **Weight, without mounting hardware** | 8 kg \| 17.637 lb |

## Regulatory Compliance/Certifications

| Agency | Classification |
|---|---|
| ISO 9001:2015 | Designed, manufactured and/or distributed under this quality management system |



©2024 CommScope, Inc. All rights reserved. CommScope and the CommScope logo are registered trademarks of CommScope and/or its affiliates in the U.S. and other countries. For additional trademark information see https://www.commscope.com/trademarks. All product names, trademarks and registered trademarks are property of their respective owners. Revised: June 26, 2024