AIR-FOSC

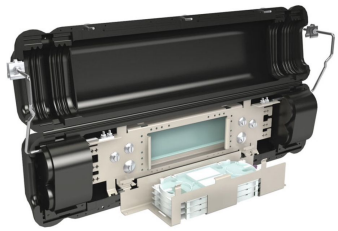

AIR FOSC Aerial Fiber Optic Splice Closure

AIR FOSC fiber optic splice closures are designed for aerial, strand-mount FTTH “tap” locations where drop cables are spliced to distribution cables. Available in two sizes (A and B), these freebreathing closures combine TE's GelGuard cable sealing gel technology and standard FOSC splice tray in a strong, rodent-proof outer body. AIR FOSC closures are compatible with all loose buffer tube and central core tube cables containing either stranded or ribbon fiber, and feature a convenient flipdown basket for fiber splice tray storage.

The AIR FOSCclosure is available in 2 different sizes.

The AIR FOSC “A” closure is the smaller of the two and facilitates in-line splicing with stored buffer tube or ribbon slack. The “A” size is available with sealed connectors.

The AIR FOSC “B” size is longer and can be used for either in-line splicing or taut sheath splicing where no slack storage is available.

Key features of the AIR FOSC closures:

- Free Breathing
- Gel-Seal Cable Sealing
- In-Line and Taut Sheath Capabilities
- Compatible with most cable types
- Outer body can be completely removed for 360 degree splice access
- Re-useable gel end pieces open and close easily for adding or removing drop cables providing efficient cable installation with no mess
- Six cable ports accommodate up to 18 cables and provide flexibility for a variety of applications
- Accommodates standard FOSC A or B splice trays (depending on model) common with other FOSC splice closures
- Removable splice tray holder available for convenient aerial splicing
- Optional adjustable hanger bracket or extension brackets for added flexibility
- Compatible with TE's CWDM modules and optical splitter trays for the changing needs of optical networks

Product Classification

Product Type	In-line, rectangular fiber closure
Product Brand	FOSC®
Product Series	AIR FOSC

General Specifications

Cable Entry Drop Port Style	Round

©2022 CommScope, Inc. All rights reserved. All trademarks identified by ® or ™ are registered trademarks, respectively, of CommScope. All specifications are subject to change without notice. See www.commscope.com for the most current information. Revised: April 25, 2022

AIR-FOSC

Cable Entry Main Port Style	Round
Cable Ports Quantity, total	6 round ports
Cable Sealing Type	Compressed gel
Closure Sealing Type	Free breathing with bolts
Closure Style	In-line
Color	Black
Mounting	Strand
Network Area Type	Drop

©2022 CommScope, Inc. All rights reserved. All trademarks identified by ® or ™ are registered trademarks, respectively, of CommScope. All specifications are subject to change without notice. See www.commscope.com for the most current information. Revised: April 25, 2022

AIR-FOSC

Dimension Drawing

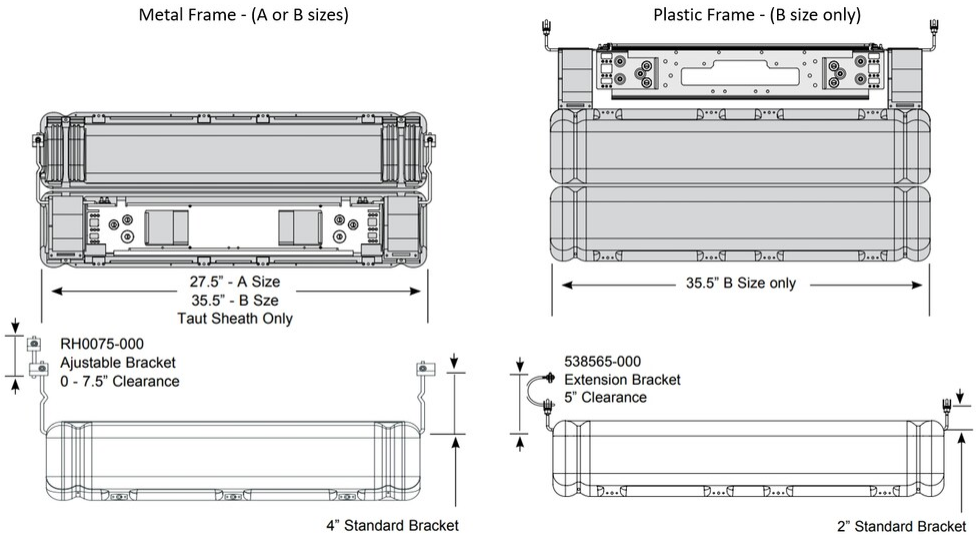

Ordering Tree

AIR-FOSC-X-XXX-XX-XXX

Closure size

A-A	A Size Splice Trays
B-B	B Size Splice Trays

Style

GEN	Generic: Plastic Frame - B Size Metal Frame - A
TSH	Taut Sheath, Metal - B Size Only

Tray Style

12-12	Splice Capable (standard tray style)
24-24	24 Splice Capable (standard tray style)
RB	Ribbon Tray
NT	No Tray

Miscellaneous

S	Standard Hanger Bracke
X	Adjustable Hanger bracket (metal frame only) use Extension bracket for Plastic Frame

Grounding

G	Grounding
N	No Ground

Number of Trays

0-4	With protection enclosure
0-2	With RB TRay

Material Specifications

Material Type Rodent-proof plastic

Environmental Specifications

Environmental Space Above ground

Regulatory Compliance/Certifications

Agency	Classification
ISO 9001:2015	Designed, manufactured and/or distributed under this quality management system

©2022 CommScope, Inc. All rights reserved. All trademarks identified by ® or ™ are registered trademarks, respectively, of CommScope. All specifications are subject to change without notice. See www.commscope.com for the most current information. Revised: April 25, 2022

ISO 9001:2015

©2022 CommScope, Inc. All rights reserved. All trademarks identified by ® or ™ are registered trademarks, respectively, of CommScope. All specifications are subject to change without notice. See www.commscope.com for the most current information. Revised: April 25, 2022

COMMSCOPE®