PFC-304016

Powered Fiber Cable, OM3, 4 Fibers, Outdoor, 16AWG Conductor, meter, feet

- Easy peel, stranded conductors for maximum cable flexibility and rapid access
- Polarization indentation along one side of the cable for polarity identification
- No special tools or mounting hardware required - usage of a standard “FTTH” pressure clamp for aerial installation
- Easy split of cable into three separate sections for separate routing in closures, as needed for installation
- Polyethylene jacket for outdoor duct or direct buried applications

Product Classification

Regional Availability	Asia | Australia/New Zealand | EMEA | Latin America | North America
Product Type	Hybrid cable, fiber and power
Ordering Note	Minimum order quanity is 500 meter

General Specifications

Cable Type	Stranded outdoor
Fiber Short Description	PFC-O16
Jacket Color	Black
Total Fiber Count	4

Dimensions

Height Over Jacket	4.318 mm | 0.17 in
Width Over Jacket	11.43 mm | 0.45 in
Conductor Gauge	16 AWG

Outline Drawing

©2024 CommScope, Inc. All rights reserved. CommScope and the CommScope logo are registered trademarks of CommScope and/or its affiliates in the U.S. and other countries. For additional trademark information see https://www.commscope.com/trademarks. All product names, trademarks and registered trademarks are property of their respective owners. Revised: September 20, 2024

PFC-304016

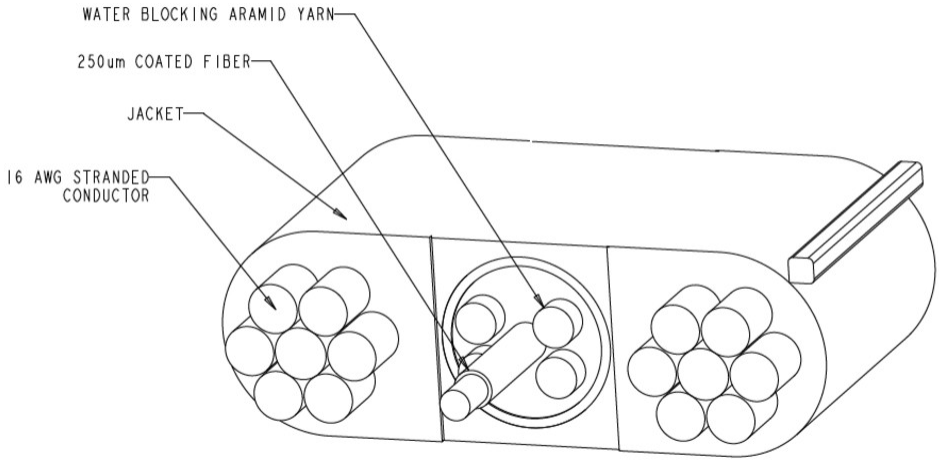

Mechanical Specifications

Minimum Bend Radius, loaded	50.8 mm | 2 in
Minimum Bend Radius, unloaded	30.48 mm | 1.2 in
Tensile Load, long term, maximum	133.447 N | 30 lbf
Tensile Load, short term, maximum	440.374 N | 99 lbf
Vertical Rise, maximum	122.011 m | 400.3 ft

Optical Specifications

Fiber Type	OM3, bend insensitive

Environmental Specifications

Installation temperature	-10 °C to +60 °C (+14 °F to +140 °F)
Operating Temperature	-40 °C to +70 °C (-40 °F to +158 °F)
Storage Temperature	-40 °C to +70 °C (-40 °F to +158 °F)
Cable Qualification Standards	Telcordia GR-20-CORE Issue 4
Environmental Space	Outdoor
Jacket UV Resistance	UV stabilized

Packaging and Weights

Cable weight	69.944 kg/km | 47 lb/kft

©2024 CommScope, Inc. All rights reserved. CommScope and the CommScope logo are registered trademarks of CommScope and/or its affiliates in the U.S. and other countries. For additional trademark information see https://www.commscope.com/trademarks. All product names, trademarks and registered trademarks are property of their respective owners. Revised: September 20, 2024

PFC-304016

Regulatory Compliance/Certifications

Agency	Classification
CHINA-ROHS	Below maximum concentration value
REACH-SVHC	Compliant as per SVHC revision on www.commscope.com/ProductCompliance
ROHS	Compliant
UK-ROHS	Compliant

Included Products

CS-5E-PFC – 50µm OM3 Bend-Insensitive Multimode Fiber

©2024 CommScope, Inc. All rights reserved. CommScope and the CommScope logo are registered trademarks of CommScope and/or its affiliates in the U.S. and other countries. For additional trademark information see https://www.commscope.com/trademarks. All product names, trademarks and registered trademarks are property of their respective owners. Revised: September 20, 2024

CS-5E-PFC

50µm OM3 Bend-Insensitive Multimode Fiber

Product Classification

Portfolio	CommScope®
Product Type	Optical fiber

General Specifications

Cladding Diameter	125 µm
Cladding Diameter Tolerance	±0.8 µm
Cladding Non-Circularity, maximum	0.7 %
Coating Diameter (Colored)	242 µm
Coating Diameter Tolerance (Colored)	±7 µm
Coating/Cladding Concentricity Error, maximum	10 µm
Core Diameter	50 µm
Core Diameter Tolerance	±2.5 µm
Core/Clad Offset, maximum	1 µm
Proof Test	689.476 N/mm² | 100000 psi

Mechanical Specifications

Macrobending, 15 mm Ø mandrel, 2 turns	0.20 dB @ 850 nm | 0.50 dB @ 1,300 nm
Macrobending, 30 mm Ø mandrel, 2 turns	0.10 dB @ 850 nm | 0.30 dB @ 1,300 nm
Coating Strip Force, maximum	8.9 N | 2.001 lbf
Coating Strip Force, minimum	1.3 N | 0.292 lbf
Dynamic Fatigue Parameter, minimum	25

Optical Specifications

Numerical Aperture	0.2
Numerical Aperture Tolerance	±0.015
Point Defects, maximum	0.2 dB
Zero Dispersion Slope, maximum	0.105 ps/[km-nm-nm]
Zero Dispersion Wavelength, maximum	1340 nm
Zero Dispersion Wavelength, minimum	1295 nm

©2024 CommScope, Inc. All rights reserved. CommScope and the CommScope logo are registered trademarks of CommScope and/or its affiliates in the U.S. and other countries. For additional trademark information see https://www.commscope.com/trademarks. All product names, trademarks and registered trademarks are property of their respective owners. Revised: September 20, 2024

CS-5E-PFC

Optical Specifications, Wavelength Specific

Attenuation, maximum	1.20 dB/km @ 1,300 nm | 3.00 dB/km @ 850 nm
Backscatter Coefficient	-68.0 dB @ 850 nm | -75.7 dB @ 1,300 nm
Bandwidth, Laser, minimum	2,000 MHz-km @ 850 nm | 500 MHz-km @ 1,300 nm
Bandwidth, OFL, minimum	1,500 MHz-km @ 850 nm | 500 MHz-km @ 1,300 nm
Differential Mode Delay Note	Superior to ANSI/TIA TIA-492AAAF and IEC 60793-2-10 at 850 nm
Index of Refraction	1.477 @ 1,300 nm | 1.482 @ 850 nm
Standards Compliance	ANSI/TIA-492AAAF (OM3)

Environmental Specifications

Heat Aging, maximum	0.10 dB/km @ 85 °C
Temperature Dependence, maximum	0.1 dB/km
Temperature Humidity Cycling, maximum	0.1 dB/km
Water Immersion, maximum	0.10 dB/km @ 23 °C

Regulatory Compliance/Certifications

Agency	Classification
ISO 9001:2015	Designed, manufactured and/or distributed under this quality management system

* Footnotes

Temperature Dependence, maximum	Temperature dependence is conducted at -60 °C to +85 °C (-76 °F to +185 °F)
Temperature Humidity Cycling, maximum	Temperature humidity cycling is conducted at -10 °C to +85 °C (+14 °F to +185 °F) up to 95% relative humidity

©2024 CommScope, Inc. All rights reserved. CommScope and the CommScope logo are registered trademarks of CommScope and/or its affiliates in the U.S. and other countries. For additional trademark information see https://www.commscope.com/trademarks. All product names, trademarks and registered trademarks are property of their respective owners. Revised: September 20, 2024